GRUNDFOS **DATA BOOKLET**

KPL and KWM

11-800 kW
50 Hz

BE > THINK > INNOVATE >

GRUNDFOS

Table of contents

1. Product introduction 3
Applications 3
Main constructional features 3

2. Performance range 4

3. Identification 5
Type key 5
Nameplate 6

4. Selection of product 7
Ordering a pump 7
Pump 7
Custom-built variants 7
Accessories 7
Controller 7

5. Variants 8

6. Construction 9
KPL pumps 9
KWM pumps 11
Components and material specification, KPL and KWM 11

7. Product description 12
Features 12
Operating conditions 12
Motor range 13
Explosion-proof pumps 13
Wiring diagrams 14

8. Curve charts 15
How to read the performance curves 15
How to select a pump 16
KPL.500.---.4.T.50.A 17
KPL.600.---.6.T.50.A 18
KPL.700.---.6.T.50.A 19
KPL.700.---.8.T.50.A 20
KPL.800/900.---.6.T.50.A 21
KPL.800.---.8.T.50.A 22
KPL.1000.---.8.T.50.A 23
KPL.1000.---.10.T.50.A 24
KPL.1200.---.10.T.50.A 25
KPL.1200.---.12.T.50.A 26
KPL.1400.---.12.T.50.A 27
KPL.1400.---.14.T.50.A 28
KPL.1500.---.12.T.50.A 29
KPL.1500.---.14.T.50.A 30
KPL.1600.---.14.T.50.A 31
KPL.1600.---.16.T.50.A 32
KPL.1800.---.16.T.50.A 33

9. Accessories 34

10. Dimensions 36
Pump dimensions 36
Installation dimensions 37
Pit construction 39

11. Installation type 41

1. Product introduction

This data booklet deals with KPL (submersible axial-flow propeller pumps) and KWM (submersible mixed-flow pumps). This data booklet version is November 2012. A newer version might be available for download from Grundfos WebCAPS or Grundfos GO CAPS.

For WebCAPS: www.grundfos.com, launch WebCAPS and go to WebCAPS Literature to locate and download the latest version.

For GO CAPS: www.grundfos.com, > Service & support, select GO CAPS support to see how to download the latest version.

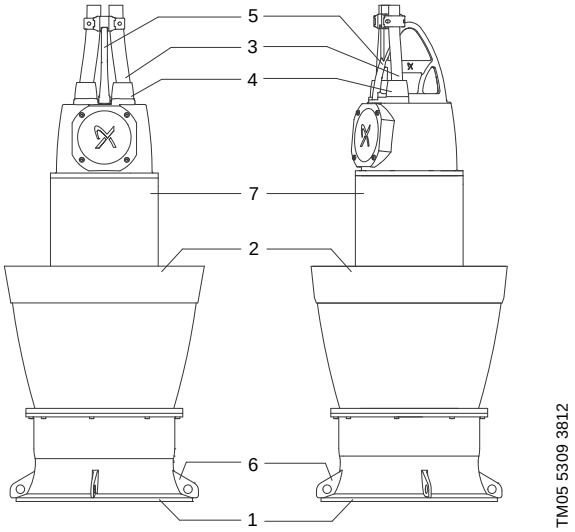

Fig. 1 KPL pump

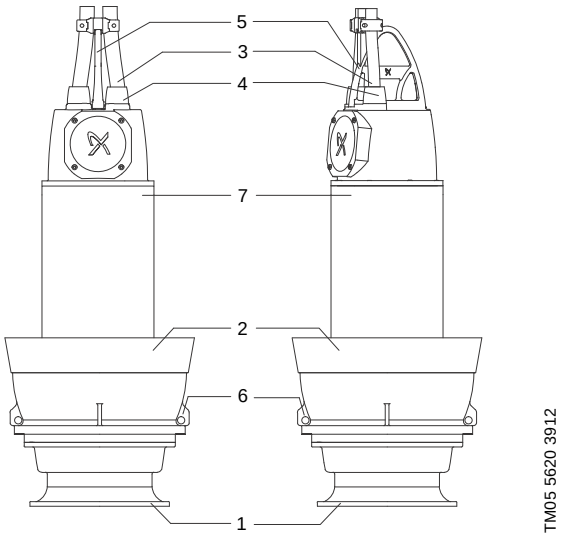

Fig. 2 KWM pump

Pos.	Description
1	Suction casing
2	Discharge casing
3	Power supply cable
4	Cable inlet
5	Lifting bracket
6	Rotation stopper
7	Submersible motor

The KPL and KWM pumps are fitted with 11-800 kW motors. The motors are either 6-, 8-, 10-, 12-, 14-, 16- or 18-pole motors, depending on motor size.

The pumps are made of resistant materials, such as cast iron and stainless steel. These materials ensure good durability in wastewater applications.

The pumps are suitable for different installation types. Please contact Grundfos for installation recommendations.

Applications

The pumps are specifically designed for pumping sewage and wastewater in a wide range of municipal and industrial applications, such as the following:

- flood and stormwater control
- drainage/irrigation of large quantities of water
- raw-water intake
- transfer of liquids in large-scale municipal sewage treatment plants
- circulation of large quantities of water in water theme parks, etc.

Main constructional features

- Compact design ensures easy handling and installation.
- High flow at low head makes the pumps versatile in a number of applications.
- Simple construction means easy maintenance.
- KPL: The propeller is individually designed for the duty point of the pump.
- KWM: The impeller is individually designed for the duty point of the pump.
- Double mechanical shaft seal system for reliable sealing between pumped liquid and motor
- Watertight cable entry
- Two moisture switches for continuous monitoring of stator housing and terminal box ensuring automatic disconnection of power in case of ingress of liquid
- Self- cleaning hydraulics reducing the risk of jamming and clogging
- Motor in insulation class F (standard) or class H (optional), enclosure class IP68 with three thermal sensors in stator windings
- Shaft seal condition monitoring via water-in-oil sensor
- PT100 sensors in upper and lower bearings
- PT100 sensor in each winding.

2. Performance range

Figure 3 shows the performance range of KPL propeller pumps, and gives an overview of the various sizes and motor variants.

Note: For information about the performance range of each individual pump, see pages 17 to 33.

Note: Performance range overview for KWM mixed-flow pumps is not available in this booklet. For more information on KWM, please contact Grundfos.

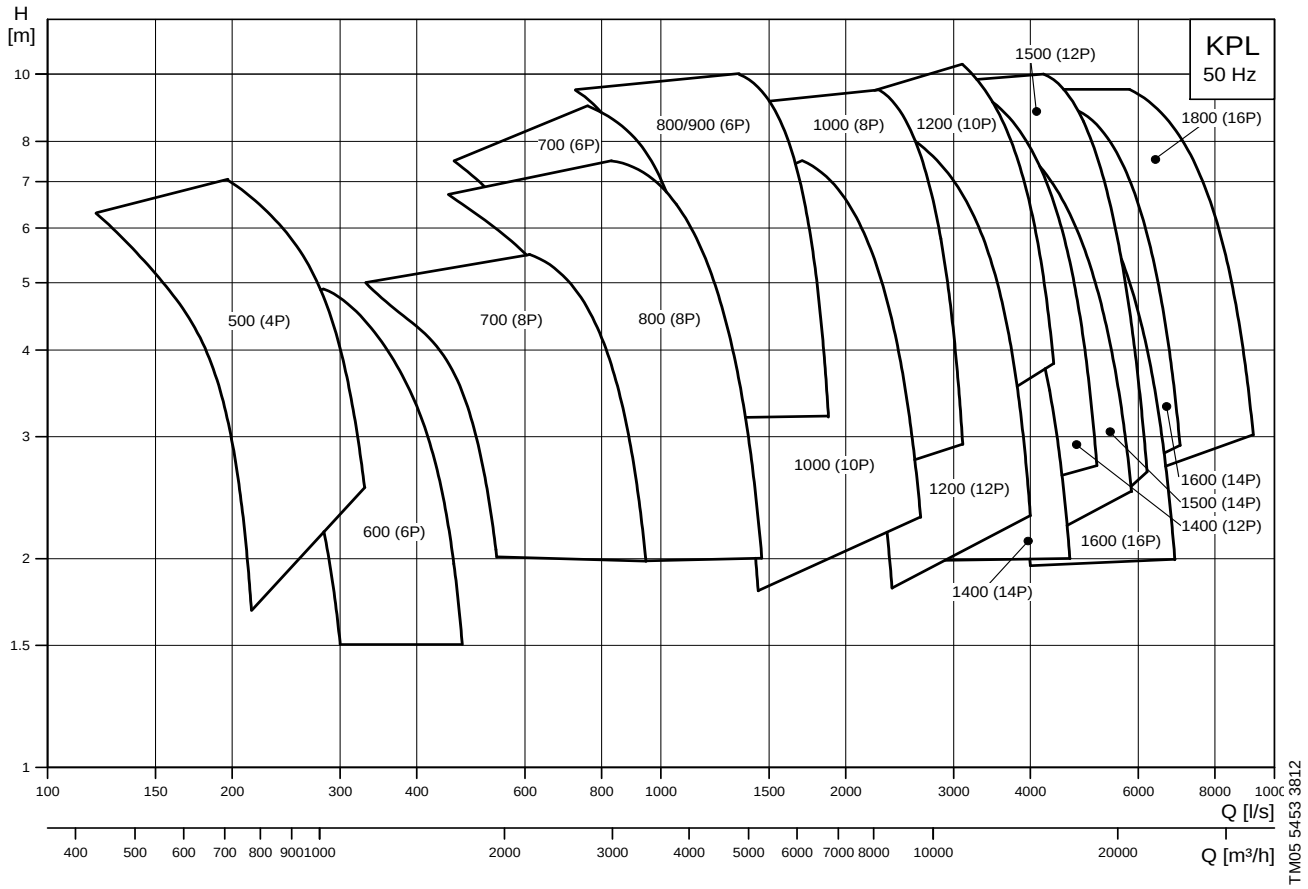

Fig. 3 Performance range, KPL

3. Identification

Type key

All KPL and KWM pumps described in this data booklet are identified by the type designation stated in the order confirmation and other documentation supplied with the pump.

Please note that the pump types described in this data booklet are not necessarily available in all variants.

Code	Example	KPL	.1800	.550	.10	.T	.50	.17	.A	.40	.Z

Code	Description
	Pump type
KPL	Submersible axial-flow pump
KWM	Submersible mixed-flow pump
	Column pipe diameter
500	DN 500
600	DN 600
700	DN 700
800	DN 800
900	DN 900
1000	DN 1000
1200	DN 1200
1400	DN 1400
1500	DN 1500
1600	DN 1600
1800	DN 1800
	Motor power [kW]
	Number of poles
4	4-pole
6	6-pole
8	8-pole
10	10-pole
12	12-pole
14	14-pole
16	16-pole
18	18-pole
	Number of phases
T	Three-phase motor
	Frequency
50	50 Hz
60	60 Hz
	Hydraulic properties
	KPL (propeller pitch angle):
9	9 degrees
11	11 degrees
13	13 degrees
15	15 degrees
17	17 degrees
19	19 degrees
21	21 degrees
	KWM (actual impeller diameter): [mm]
	Propeller
A	Standard range
	Voltage [V]
23	230
38	380
40	400
41	415
46	460
66	660
69	690
3H	3300
4H	4160
6H	6000
7H	6600
	Product variant:
Z	Custom-built variant

Nameplate

The nameplate is located on the top cover of the pump.

The extra nameplate supplied with the pump should be fixed at the installation site.

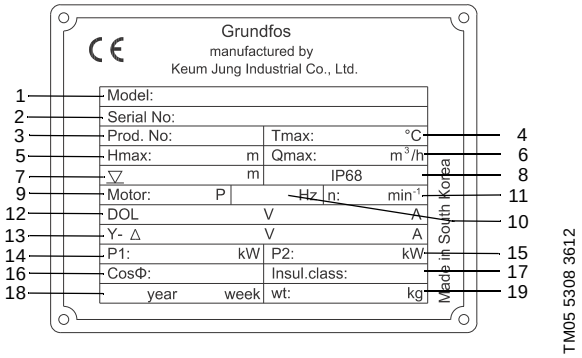

Fig. 4 Nameplate

Pos.	Description
1	Type designation
2	Serial number
3	Product number
4	Maximum ambient temperature
5	Maximum head
6	Maximum flow rate
7	Maximum installation depth
8	Enclosure class according to IEC 60529
9	Number of poles
10	Frequency
11	Rated speed
12	Voltage/current, DOL connection
13	Voltage/current, star-delta connection
14	Input power
15	Shaft power
16	Power factor
17	Insulation class
18	Production code, year/week
19	Pump weight

4. Selection of product

Ordering a pump

When ordering a KPL or KWM pump, you need to take the following four aspects into consideration:

1. pump
2. custom-built variation (option)
3. accessories
4. controller.

Pump

Use the performance range overview on page 4 to find a suitable pump size for the required duty point.

Then proceed to the individual curve charts in *Curve charts* on page 15 to find the specific pump variant that best fulfils your need.

Custom-built variants

The KPL and KWM pumps can be customised to meet individual requirements. Many pump features and options are available for customising, e.g. explosion-proof versions, various cable lengths or special materials.

The most common variants can be seen in the list of *Variants* on page 8. For requirements or designs not included in the list, please contact Grundfos.

Accessories

Depending on the installation type, you may need to order accessories. See *Accessories* on page 34 for selection of the correct accessories.

Controller

The following controllers are available:

- CUE up to 250 kW (frequency converter)
- DC/DCD control (dedicated control)
- MP204 electronic motor protection for pumps
- GU01 or GU02.

5. Variants

Motor	
Various cable lengths according to customer specifications	
EMC power cables according to customer specifications	Screened power cables for variable speed drives
SM 113 built into terminal box of sensor versions	
Vibration sensor in the terminal box	
Pt100 sensors in all three windings	
Special motor	Insulation class H (on request)
	Temperature rise class B (on request)
	Special voltage/high voltage
	Reinforced insulation for frequency converter operation (motors above 500 V)
	For explosion-proof variant, contact Grundfos
PTC thermistors in windings	
Special oil	Non-toxic Shell Ondina 917
Insulated upper bearing for VSD use	
Materials	
Stainless steel lifting bracket	AISI 316
Impeller or propeller	
Duty point-specific propeller/impeller	
Test at specified duty on standard propeller curve (KPL)	
Coating	
Paint	300 µ
	450 µ
Belzona® coating 1341 (Supermetalglide)	Impeller
	Discharge casing
	Suction casing
Tests	
Trimmed impeller for specified duty test	
Additional test of entire QH curve (including report)	5-10 points on the pump performance curve (Q/H)
ISO 9906 standard according to	Grade 1 tolerances
	Grade 2 tolerances
Vibration test (incl. report)	
NPSHr test	Not yet available
Witness test	Contact Grundfos
Miscellaneous	
Special packaging	Contact Grundfos
Special nameplate	Contact Grundfos
Other variants	Contact Grundfos

6. Construction

KPL pumps

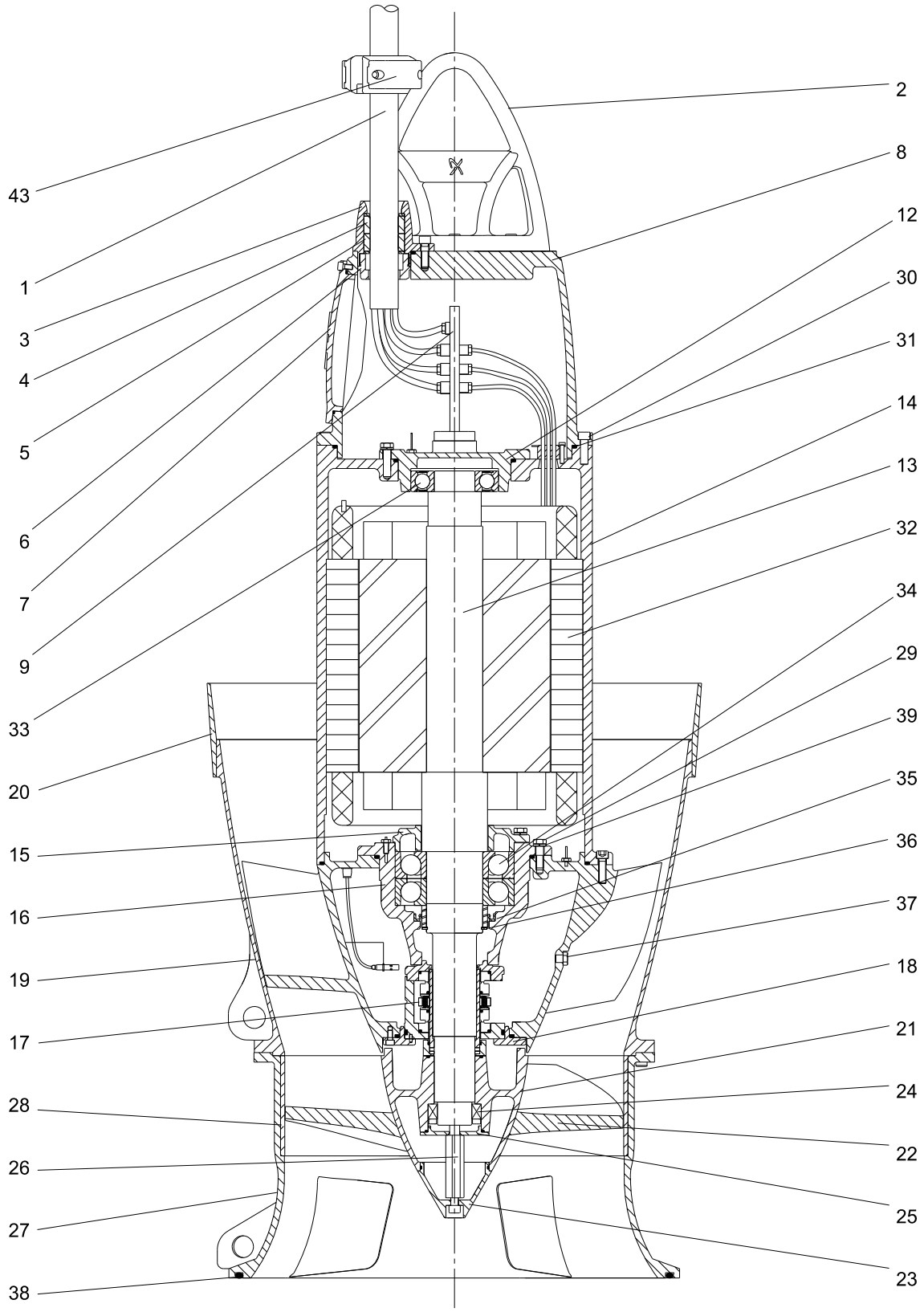

Fig. 5 Sectional drawing, KPL, column pipe 500-800

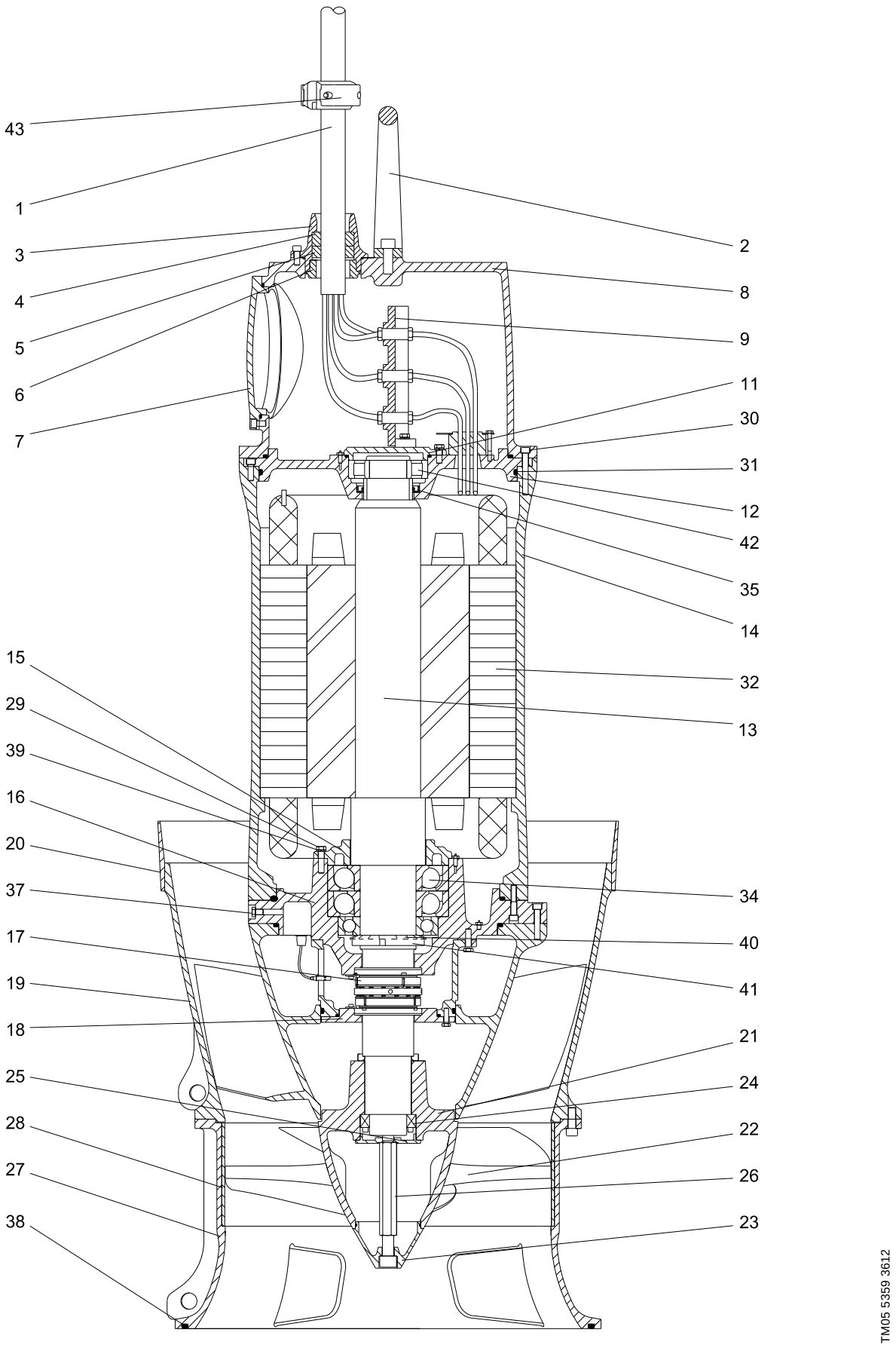

Fig. 6 Sectional drawing, KPL, column pipe 1000-1800

KWM pumps

Construction drawings for KWM pumps are not available for this data booklet. For more information, please contact Grundfos.

Components and material specification, KPL and KWM

Pos.	Component	Material	DIN	ASTM
1	Cable	PNCT		
2	Lifting bracket	Stainless steel	G-X6Cr-Ni-1809	A743-CF-8
3	Cable entry	Stainless steel	G-X6Cr-Ni-1809	A743-CF-8
4	Washer/rubber seal/washer	Stainless steel/NBR rubber		
5	Disc spring			
6	Cable entry, lower	Cast iron	GG25	A48-CL35
7	Terminal box cover	Cast iron	GG25	A48-CL35
8	Terminal box	Cast iron	GG25	A48-CL35
9	Terminal board			
11	Upper bearing cover	Cast iron	GG25	A48-CL35
12	Motor top cover	Cast iron	GG25	A48-CL35
13	Rotor shaft	Stainless steel	X10Cr13	A276-410
14	Stator housing	Cast iron	GG25	A48-CL35
15	Bearing cover	Cast iron	GG25	A48-CL35
16	Bearing housing	Cast iron	GG25	A48-CL35
17	Shaft seal	SIC/SIC		
18	Seal chamber	Cast iron	GG25	A48-CL35
19	Discharge casing	Cast iron	GG25	A48-CL35
20	Turbulence optimiser	Rubber		
21	Propeller/impeller hub	Stainless steel	G-X6Cr-Ni-1809	A743-CF-8
22	Propeller/impeller vane	Stainless steel	G-X6Cr-Ni-1809	A743-CF-8
23	Propeller/impeller cap	Stainless steel	G-X6Cr-Ni-1809	A743-CF-8
24	Power lock	Steel		
25	Shaft-end washer	Stainless steel	X5CrNi-1809-1.4301	A276-304
26	Shaft-end bolt	Stainless steel	X5CrNi-1809-1.4301	A276-304
27	Suction casing	Cast iron	GG25	A48-CL35
28	Wear ring	Stainless steel	X5CrNi-1809-1.4301	A276-304
29	Bolt	Stainless steel	X5CrNi-1809-1.4301	A276-304
30	Bolt	Stainless steel	X5CrNi-1809-1.4301	A276-304
31	O-ring	NBR rubber		
32	Stator			
33	Ball bearing	Steel		
34	Ball bearing	Steel		
35	Oil seal	NBR rubber and Steel		
36	Locking ring	Steel		
37	Oil plug	Stainless steel	X5CrNi-1809-1.4301	A276-304
38	O-ring	NBR rubber		
39	Washer	Stainless steel	X5CrNi-1809-1.4301	A276-304
40	Lock washer	Steel		
41	Lock nut	Steel		
42	Roller bearing	Steel		
43	Cable clamp			

7. Product description

Features

Bearings

The bearings are greased for life.

Main bearings

Angular contact ball bearings and roller bearing with angle ring.

Support bearings

Single-row deep-groove ball bearing and roller bearing.

Shaft seals

The pumps have a primary and a secondary shaft seal.

The material combination of the primary shaft seal in all pump types is silicon carbide/silicon carbide. For the secondary shaft seal, the material combination is silicon carbide/carbon

The shaft seals are placed in the pump's oil chamber. The oil chamber provides reliable sealing between the pumped liquid and the motor.

The shaft seals have no springs or other parts in direct contact with the pumped liquid. This prevents rags and fibres from getting caught. The shaft seals are bidirectional, meaning that they can operate in either direction thus allowing for opposite rotation caused by back-flow of liquid through the pump.

Motor

The motor is a watertight, totally enclosed motor.

- Insulation class: F.
- Temperature rise class: F.
- Enclosure class: IP68.

For motor protection and sensors, see *Sensors* below.

Power cables

The pump power and sensor cables are of the 0.6/1KV PNCT (standard) or 0.6/1KV PNCT-S (screened) type.

The cables are 10 m long as standard. Other cable lengths are available on request.

- Maximum conductor temperature: +90 °C.
- Maximum ambient temperature: +40 °C.
- Minimum ambient temperature: -20 °C.
- Conductor: Stranded plain copper conductor, class 5 (IEC 60228).
- Insulation: Extruded EP rubber.
- Sheath: Extruded black rubber (CR rubber).
- Marking: 4-core cable: Green, White, Black, Red.
  7-core cable: Green, Black, Black, White, White, Red, Red.

Control cables

The pumps have OZOFLEX H07RN-F 450/750 V control cables as standard or screened ATON VSCB 450/750 V cables on request.

Cable entry

Sealed stainless steel cable entry with optimum shape and watertight cable stuffing box to prevent damage of the cable or leaks.

Sensors

As standard the pump is equipped with these switches and sensors:

- three thermal switches (Klixon), one in each phase
- one moisture switch in terminal box and one in stator housing
- main and support bearing temperature sensors
- one PT100 sensor in the winding.

Customised sensor options

- PVS 3 (pump vibration sensor). The vibration sensor monitors the vibration level of the pump. A change in the vibration level indicates an abnormal situation. The cause of this can be a clogged propeller/impeller, worn bearings, closed discharge valve, etc., indicating that service inspection should be carried out now in order to protect the pump or the pipe system from being damaged.
- WIO (water-in-oil) sensor. The WIO sensor measures the water content in the oil and converts the value into an analogue current signal. The two sensor conductors are for power supply as well as for carrying the signal to the measuring device or controller. The sensor measures the water content from 0 to 20 %. It also sends a signal if the water content is outside the normal range (warning), or if the oil level is so low that the sensor is in the air (alarm). The sensor is fitted in a stainless steel tube for mechanical protection. The WIO sensor is connected to the Grundfos IO 113 module.
- Three PT100 sensors, one in each phase.
- Three thermistors, one in each phase.

Testing

All pumps are tested before leaving the factory. The factory test report is based on the ISO 9906 standard. Test reports can be ordered directly with the pump or can be ordered separately based on the pump serial number.

Other tests or third-party inspection certificates are available on request. See *Variants* on page 8.

Operating conditions

Pumped liquids

pH value:	4-10
Liquid temperature:	0 °C to +40 °C

When pumping liquids with a density and/or a kinematic viscosity higher than that of water, use motors with correspondingly higher outputs.

Motor range

Shaft power [kW]	Number of poles
11	4/6
15	4/6
19	4/6
22	4/6
30	8
37	8
45	8
55	6/8
75	6/8
90	6/8/10
110	6
132	6/8/10
160	6/8/10/12/14
200	6/8/10/12/14
220	10/12/14
250	8/10/12/14/16
300	8/10/12/14/16
335	10
350	10/12/14/16
375	14
400	10/12/14/16
450	12/14/16
500	12/14/16
550	14
600	16
700	16

Explosion-proof pumps

For explosion-proof operation, contact Grundfos.

Wiring diagrams

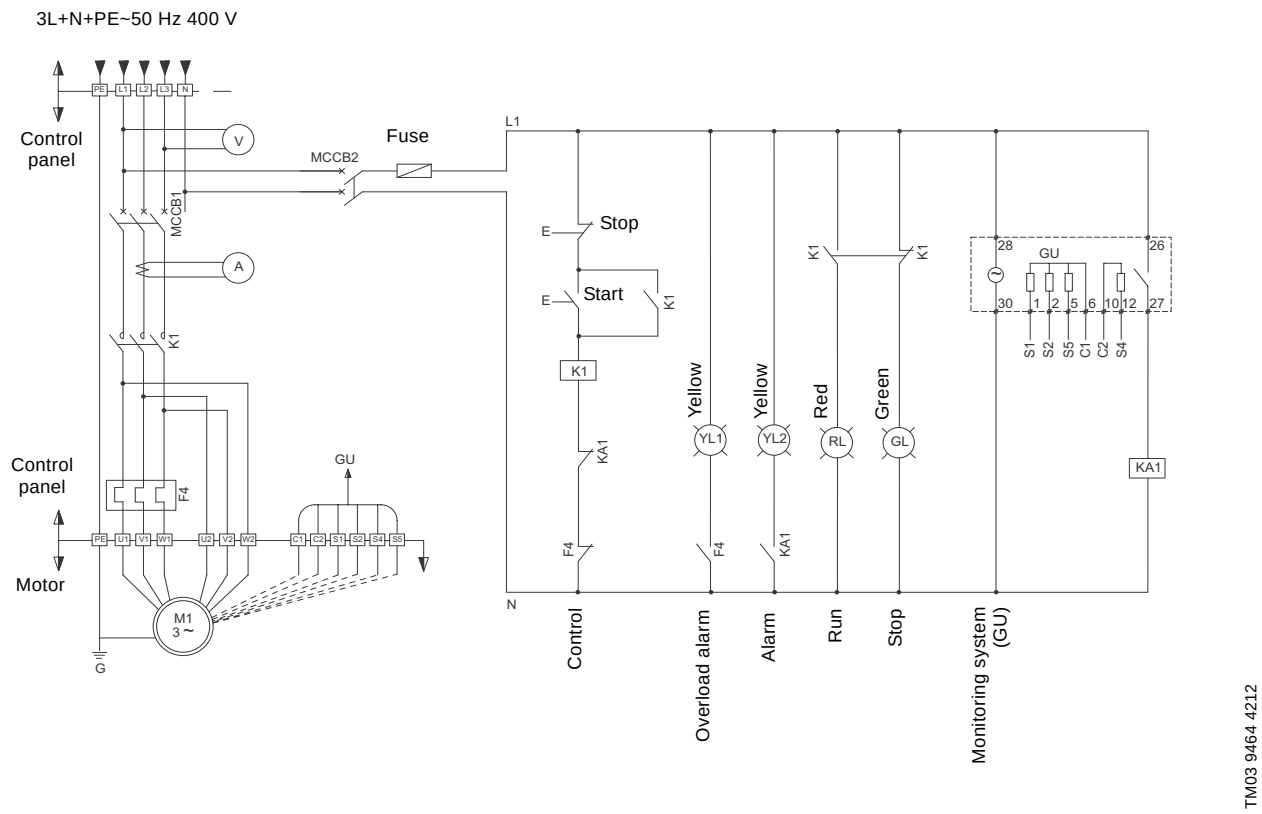

Fig. 7 Wiring diagram for DOL start

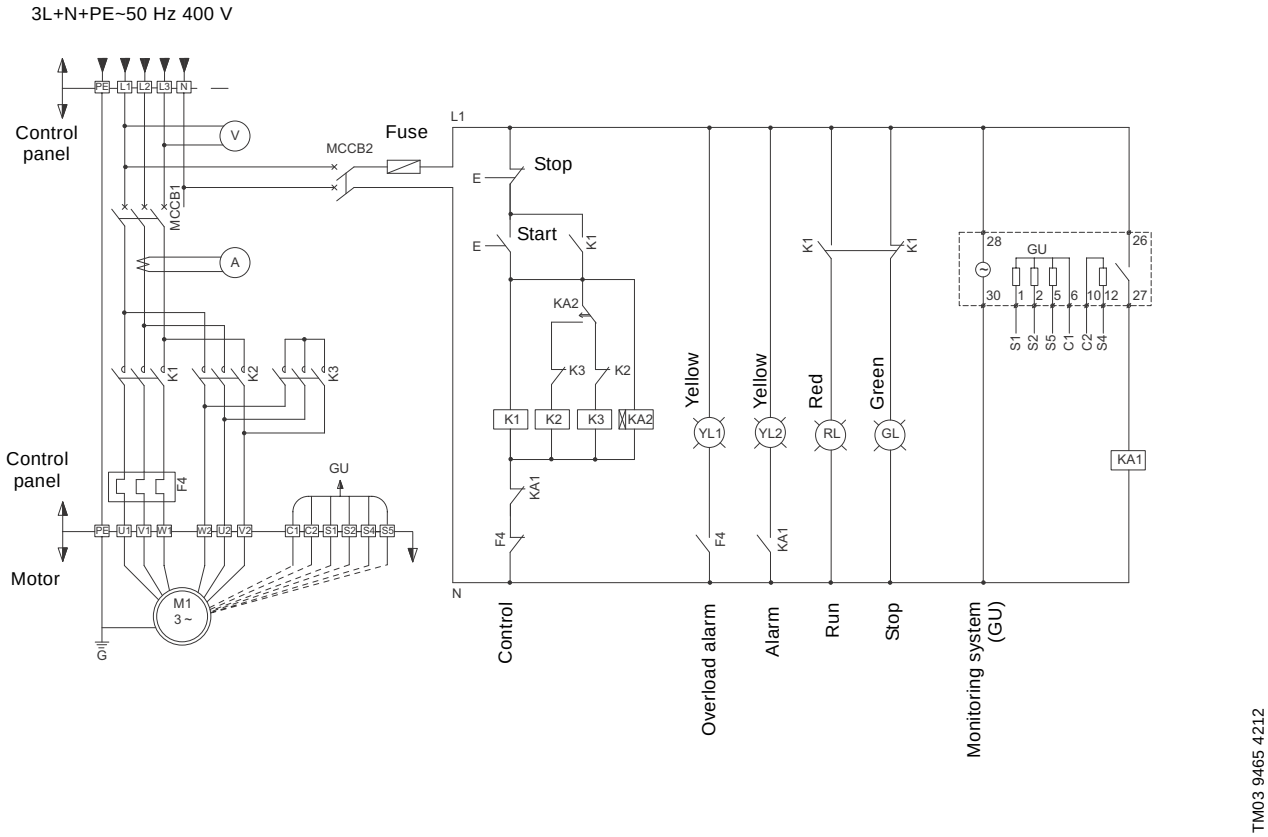

Fig. 8 Wiring diagram for Y/D start

8. Curve charts

How to read the performance curves

GRUNDFOS	KPL.1500.---.12.T.50.A PERFORMANCE CURVE	Product	KPL
		Rev. NO	1
		Date.	1.Sep.12

MODEL	MOTOR kW	FREQ. Hz	RATED SPEED rpm	POLES	TUBE	PRO. DIA. mm	NO. OF BLADES
KPL.1500.350.12.T.50.A	350	50	485	12	DN1500	1060	4
KPL.1500.400.12.T.50.A	400						
KPL.1500.450.12.T.50.A	450						
KPL.1500.500.12.T.50.A	500						

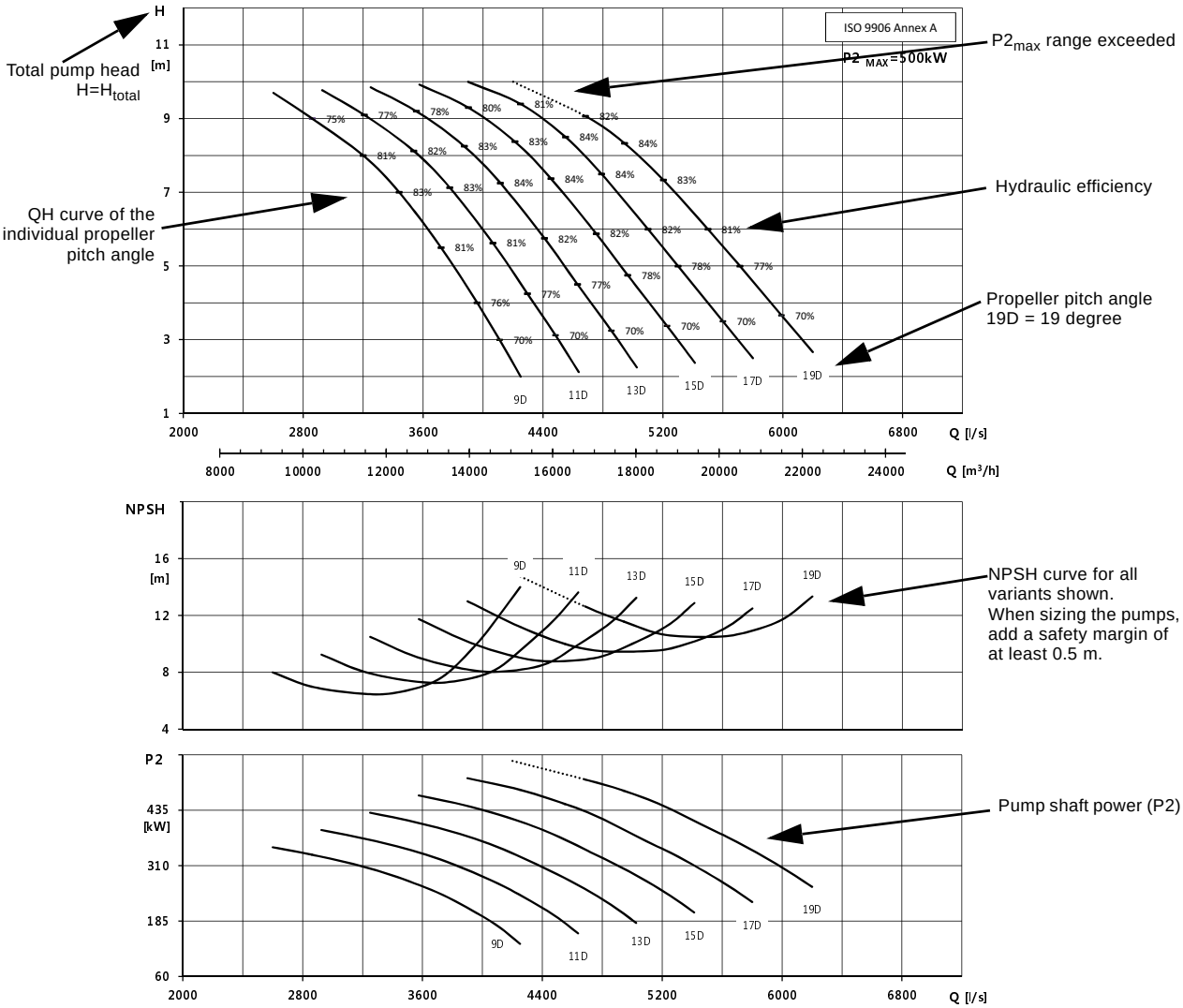

TM05 5421 4112

How to select a pump

Select a pump based on the required duty point, operating range and safety range (if required in the application). Use the curve charts on pages 17 to 33 to select the pump.

Select pump hydraulics first and motor size afterwards. Below is an example of how to choose a pump which is suitable for a specific application:

1. Duty point (H = 5 m and 1910 l/s), specified by customer.
2. Operating range (1750 l/s to 2000 l/s), specified by customer.
3. Q-H curve is obtained at a propeller angle of 19 °.
4. P2 at duty point 115 kW.
5. $P2_{max}$ in operating range 128 kW (at a flow of 1750 l/s).
   Use $P2_{max}$ for calculation of motor size.
6. Calculate motor size and select model:
   $P_{motor} = P2_{max} * 1.1$ (10 % safety margin, specified by customer)
   $P_{motor} = 128 * 1.1 = 140.8$ kW
   $P_{motor} \leq$ rated motor
   Rated motor above P_{motor} 160 kW
   Selected model; KPL.1000.160.10.T.50.19.A.
7. $NPSH_A$ (available) = 10 m, specified by customer.
   $NPSH_R$ (required) = 8 m (worst case for operating range).
   $NPSH_A > NPSH_R + 0.5$ m.

GRUNDFOS	KPL.1000.---.10.T.50.A PERFORMANCE CURVE	Product	KPL
		Rev. NO	1
		Date.	1.Sep.12

MODEL	MOTOR kW	FREQ. Hz	RATED SPEED rpm	POLES	TUBE	PRO. DIA. mm	NO. OF BLADES
KPL.1000.90.10.T.50.A	90	50	580	10	DN1000	700	4
KPL.1000.132.10.T.50.A	132						
6 → KPL.1000.160.10.T.50.A	160						
KPL.1000.200.10.T.50.A	200						

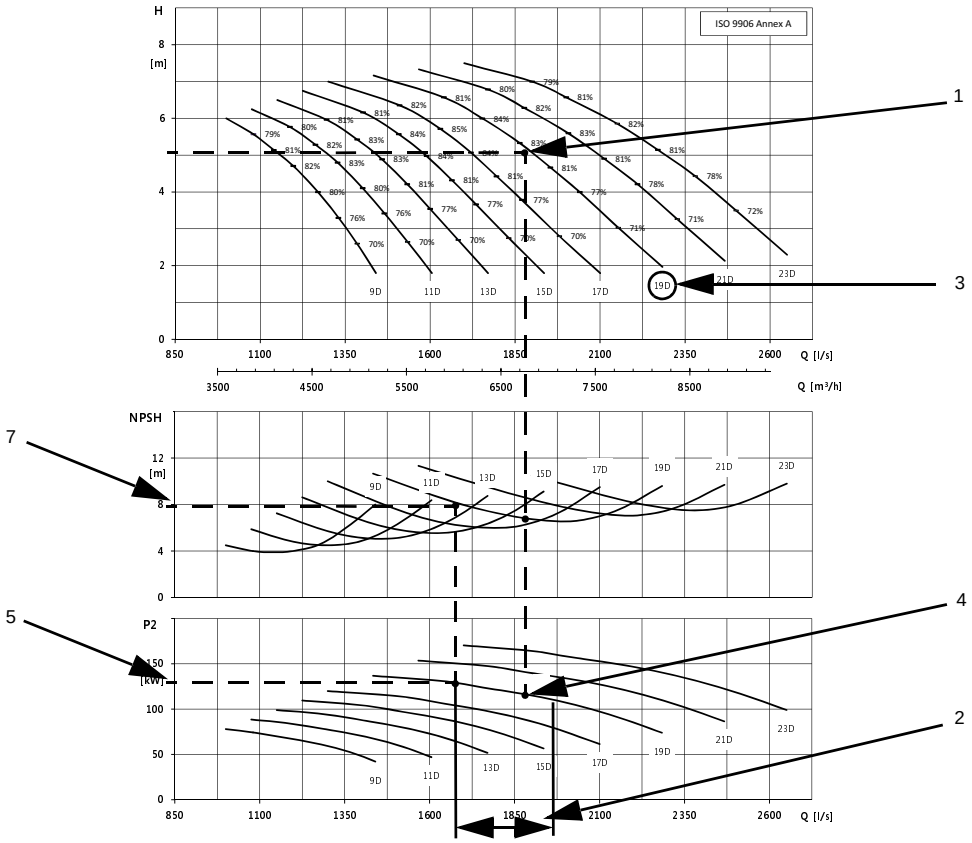

TM05 5416 3712

KPL.500.---.4.T.50.A

GRUNDFOS	**KPL.500.---.4.T.50.A** **PERFORMANCE CURVE**	Product	KPL
		Rev. NO	1
		Date.	1.Sep.12

MODEL	MOTOR kW	FREQ. Hz	RATED SPEED rpm	POLES	TUBE	PRO. DIA. mm	NO. OF BLADES
KPL.500.11.4.T.50.A	11	50	1450	4	DN500	270	4
KPL.500.15.4.T.50.A	15						
KPL.500.19.4.T.50.A	19						
KPL.500.22.4.T.50.A	22						

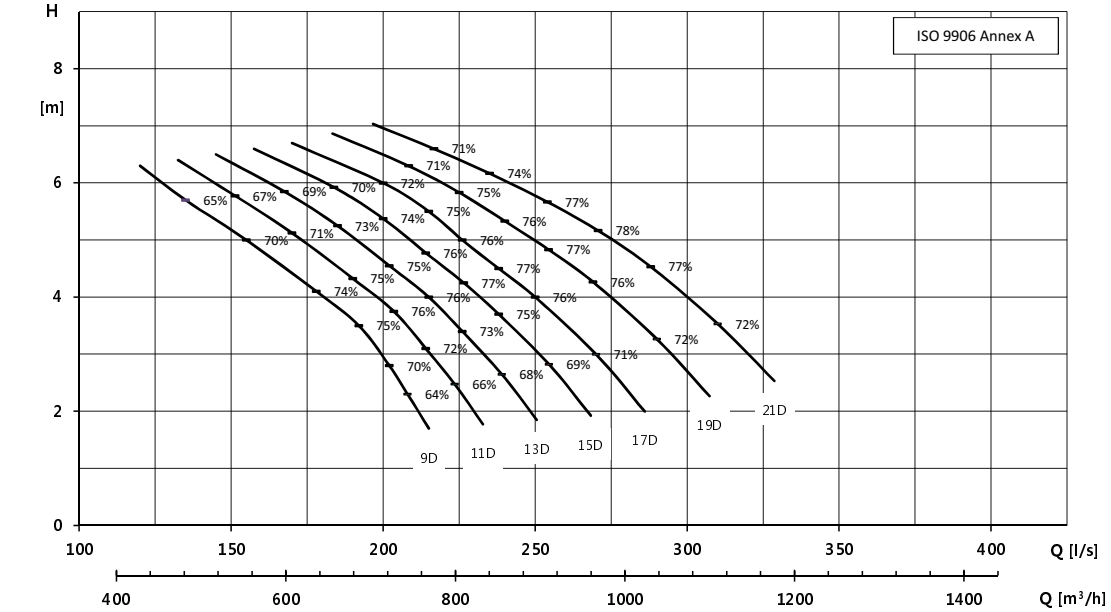

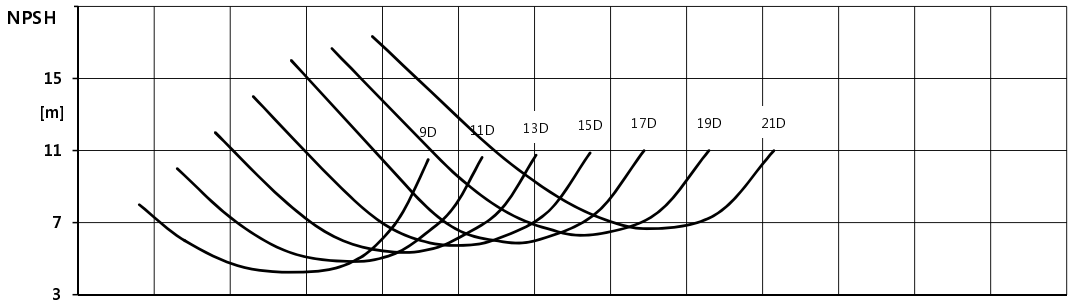

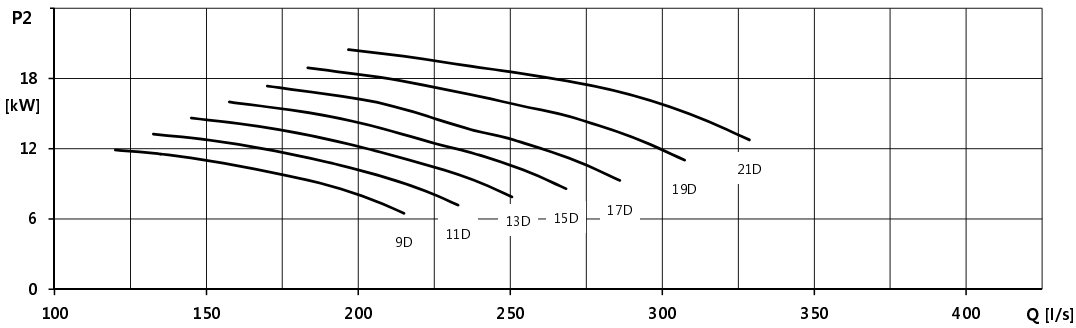

TM05 5409 3712

KPL.600.---.6.T.50.A

GRUNDFOS	KPL.600.---.6.T.50.A PERFORMANCE CURVE	Product	KPL
		Rev. NO	1
		Date.	1.Sep.12

MODEL	MOTOR kW	FREQ. Hz	RATED SPEED rpm	POLES	TUBE	PRO. DIA. mm	NO. OF BLADES
KPL.600.11.6.T.50.A	11	50	950	6	DN600	350	4
KPL.600.15.6.T.50.A	15						
KPL.600.19.6.T.50.A	19						
KPL.600.22.6.T.50.A	22						

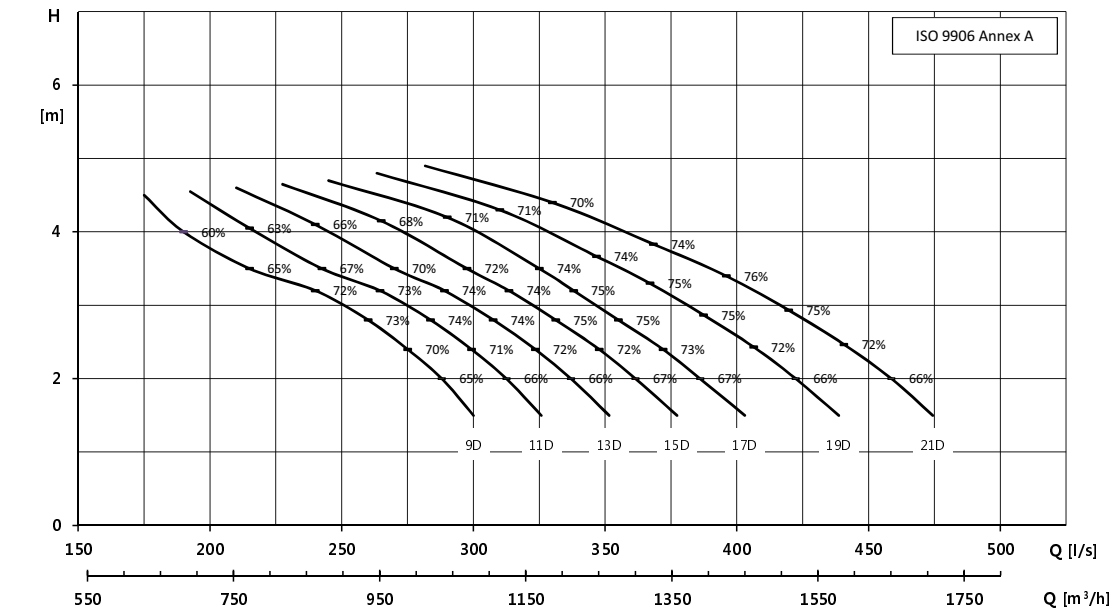

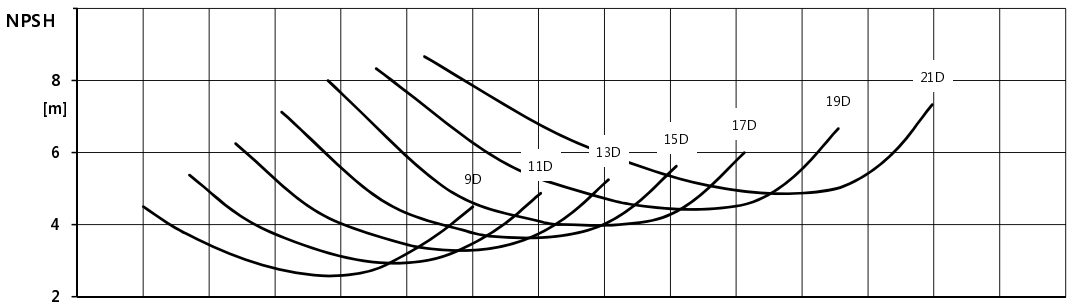

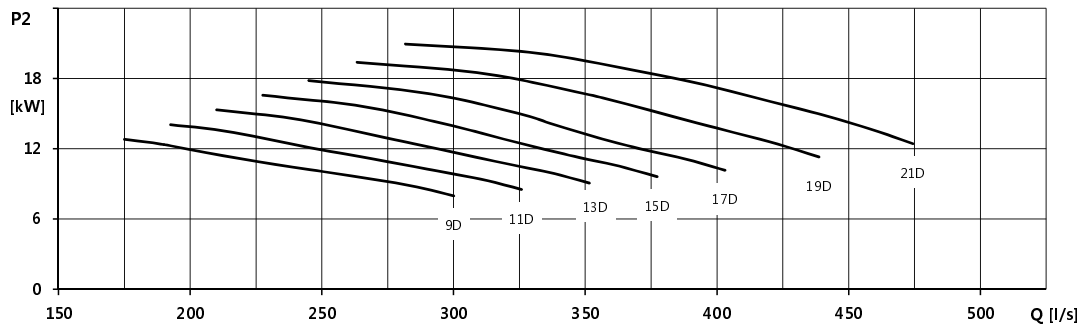

TM05 5410 3712

KPL.700.---.6.T.50.A

GRUNDFOS	KPL.700.---.6.T.50.A PERFORMANCE CURVE	Product	KPL
		Rev. NO	1
		Date.	1.Sep.12

MODEL	MOTOR kW	FREQ. Hz	RATED SPEED rpm	POLES	TUBE	PRO. DIA. mm	NO. OF BLADES
KPL.700.55.6.T.50.A	55	50	950	6	DN700	470	4
KPL.700.75.6.T.50.A	75						
KPL.700.90.6.T.50.A	90						
KPL.700.110.6.T.50.A	110						

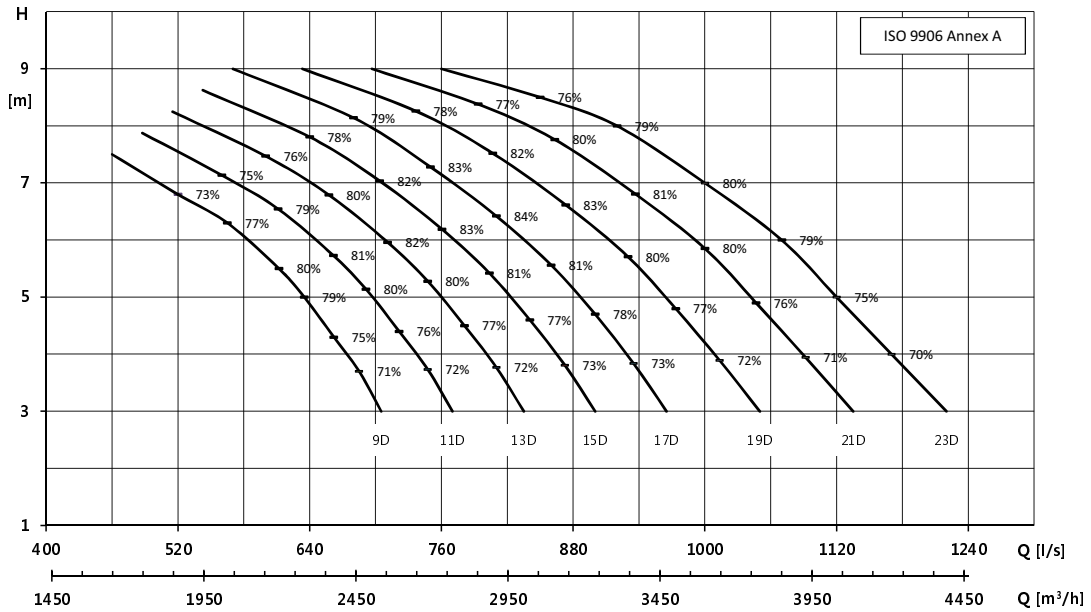

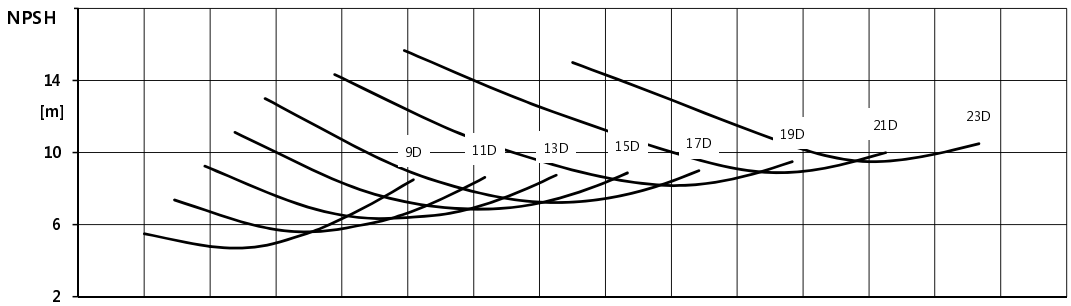

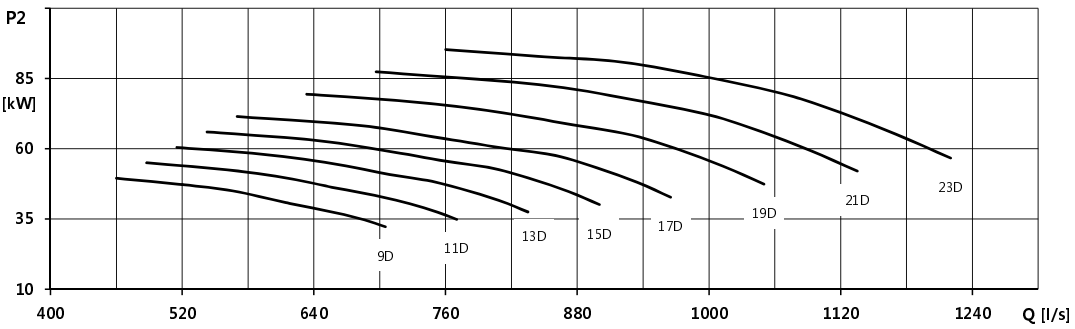

TM05 5411 3712

KPL.700.---.8.T.50.A

GRUNDFOS	KPL.700.---.8.T.50.A PERFORMANCE CURVE	Product	KPL
		Rev. NO	1
		Date.	1.Sep.12

MODEL	MOTOR kW	FREQ. Hz	RATED SPEED rpm	POLES	TUBE	PRO. DIA. mm	NO. OF BLADES
KPL.700.30.8.T.50.A	30	50	740	8	DN700	470	4
KPL.700.37.8.T.50.A	37						
KPL.700.45.8.T.50.A	45						

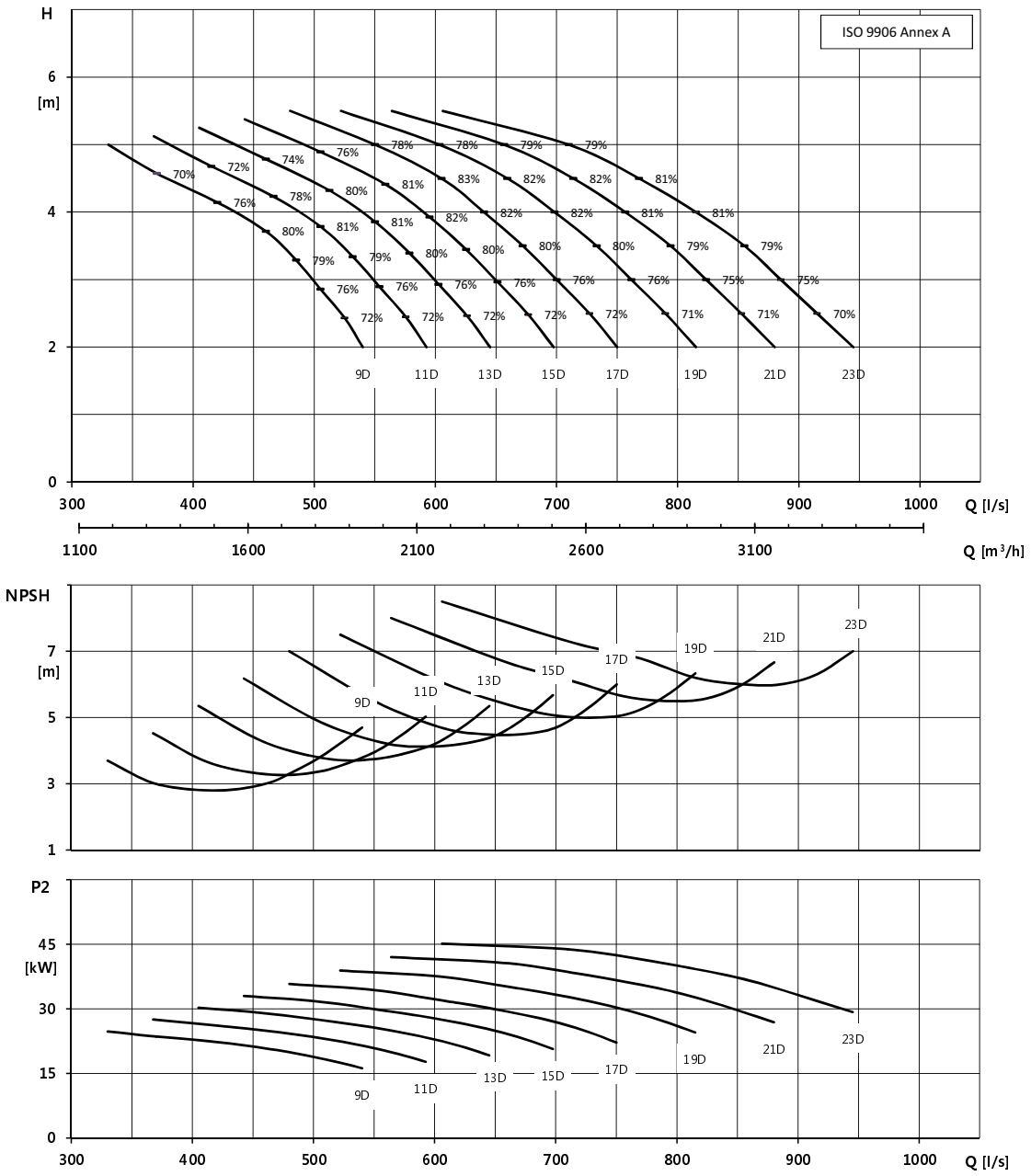

TM05 5412 4112

KPL.800/900.---.6.T.50.A

GRUNDFOS	KPL.800/900.---.6.T.50.A PERFORMANCE CURVE	Product	KPL
		Rev. NO	1
		Date.	1.Sep.12

MODEL	MOTOR kW	FREQ. Hz	RATED SPEED rpm	POLES	TUBE	PRO. DIA. mm	NO. OF BLADES
KPL.800.110.6.T.50.A	110	50	950	6	DN800	540	4
KPL.900.132.6.T.50.A	132				DN900		
KPL.900.160.6.T.50.A	160						
KPL.900.200.6.T.50.A	200						

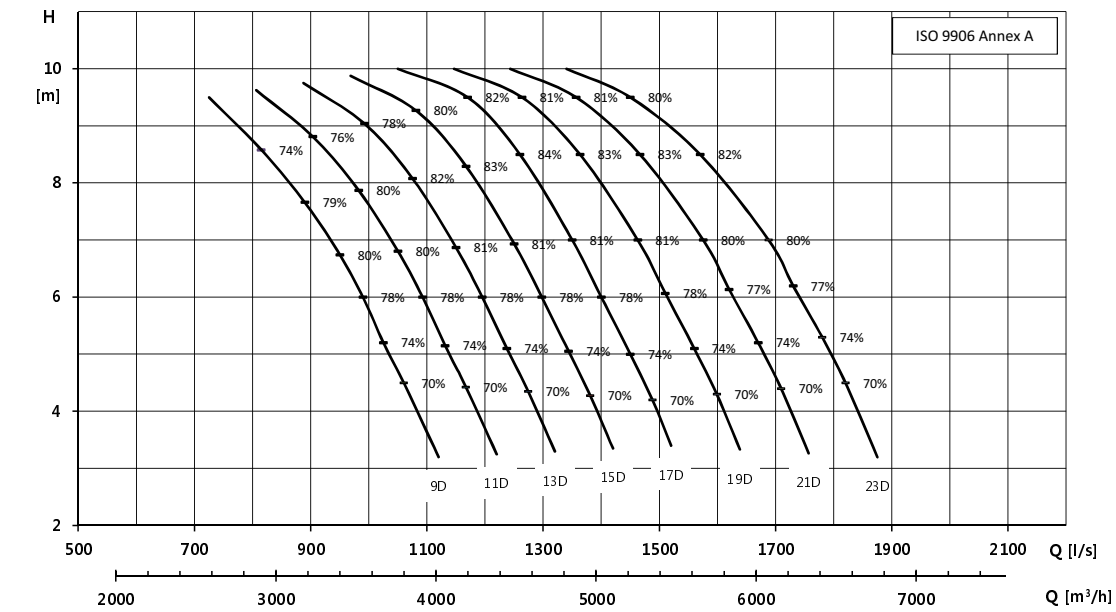

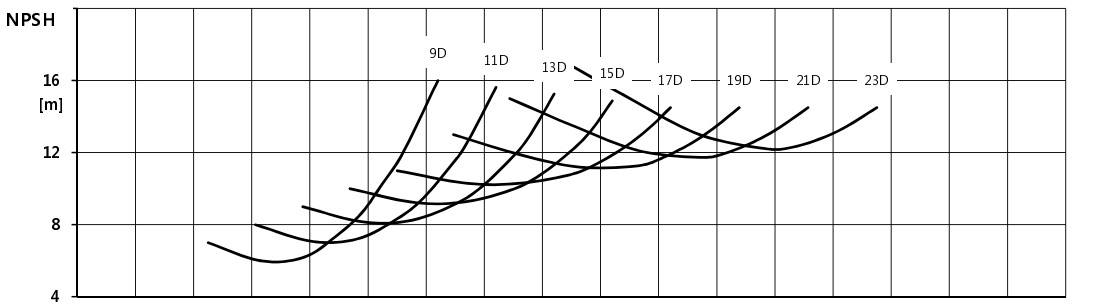

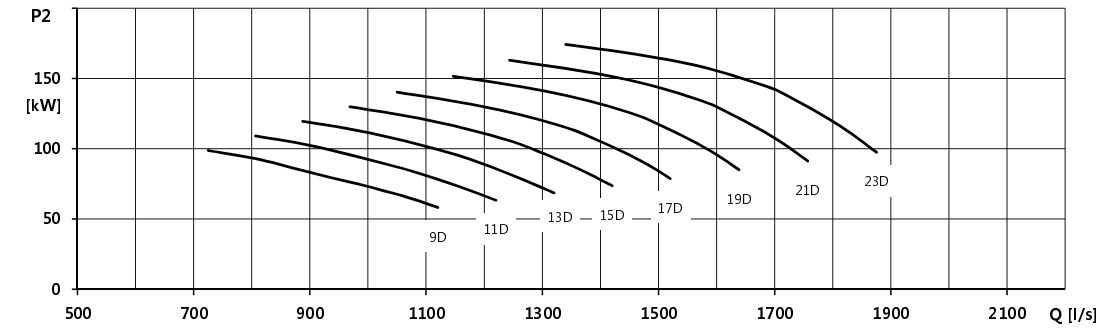

TM05 5413 3712

KPL.800.---.8.T.50.A

GRUNDFOS	KPL.800.---.8.T.50.A PERFORMANCE CURVE	Product	KPL
		Rev. NO	1
		Date.	1.Sep.12

MODEL	MOTOR kW	FREQ. Hz	RATED SPEED rpm	POLES	TUBE	PRO. DIA. mm	NO. OF BLADES
KPL.800.45.8.T.50.A	45	50	740	8	DN800	540	4
KPL.800.55.8.T.50.A	55						
KPL.800.75.8.T.50.A	75						
KPL.800.90.8.T.50.A	90						

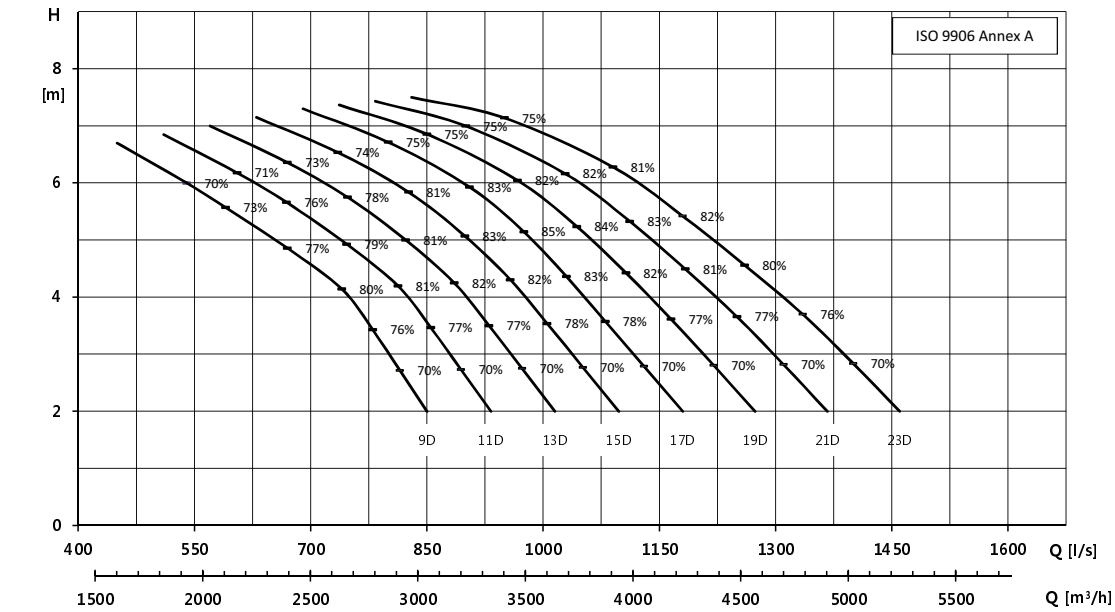

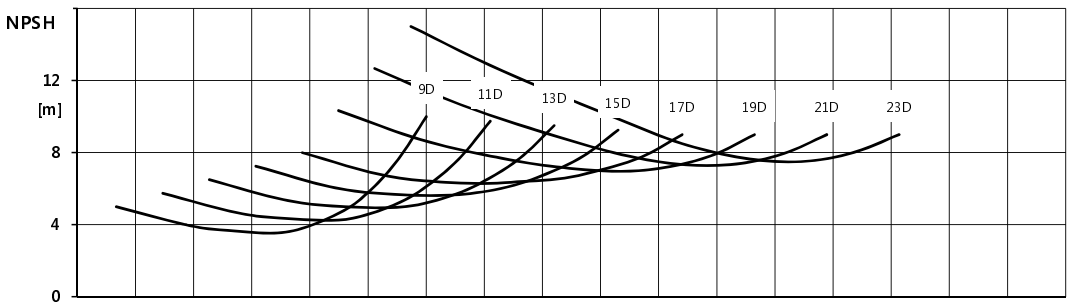

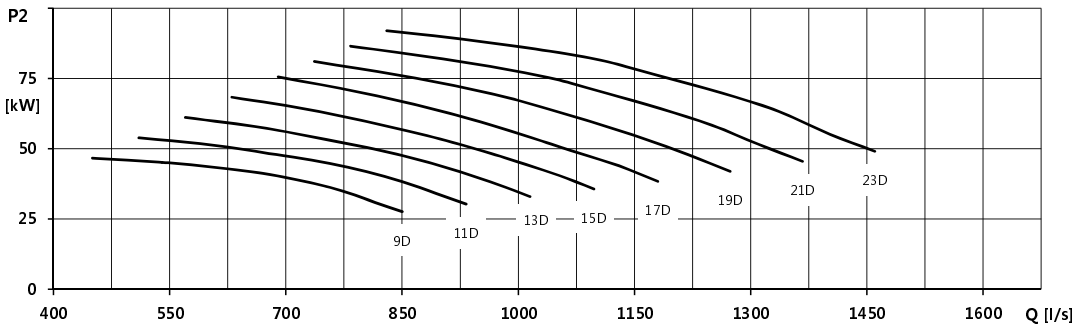

TM05 5414 3712

KPL.1000.---.8.T.50.A

GRUNDFOS	**KPL.1000.---.8.T.50.A** **PERFORMANCE CURVE**	Product	KPL
		Rev. NO	1
		Date.	1.Sep.12

MODEL	MOTOR kW	FREQ. Hz	RATED SPEED rpm	POLES	TUBE	PRO. DIA. mm	NO. OF BLADES
KPL.1000.132.8.T.50.A	132	50	720	8	DN1000	700	4
KPL.1000.160.8.T.50.A	160						
KPL.1000.200.8.T.50.A	200						
KPL.1000.250.8.T.50.A	250						
KPL.1000.300.8.T.50.A	300						

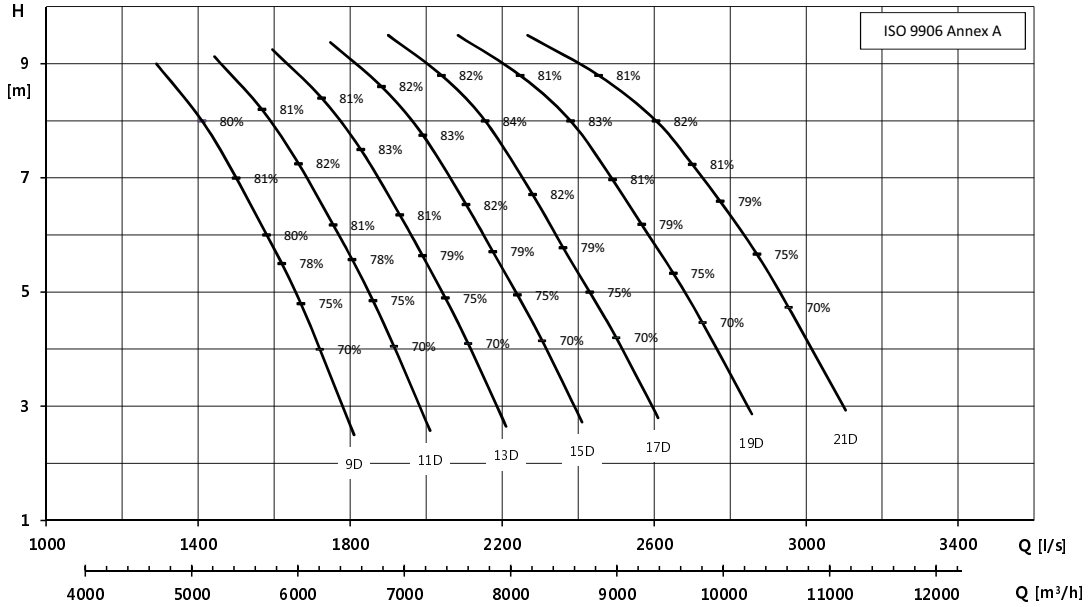

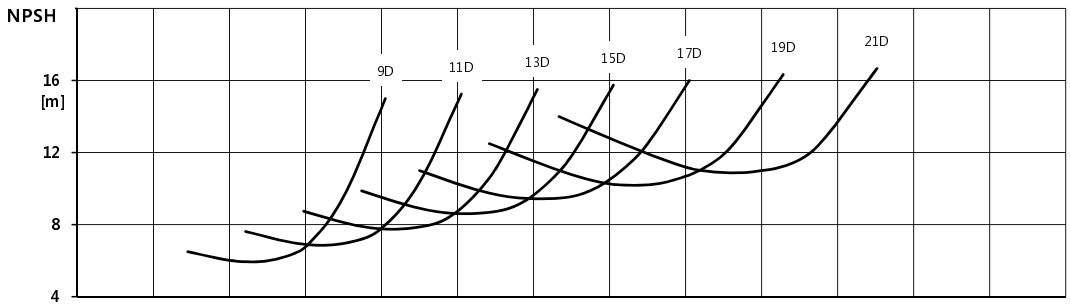

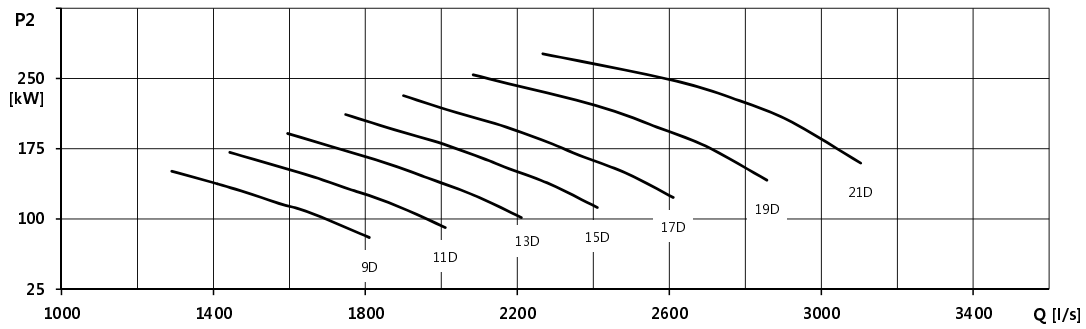

TM05 5415 3712

KPL.1000.---.10.T.50.A

GRUNDFOS	KPL.1000.---.10.T.50.A PERFORMANCE CURVE	Product	KPL
		Rev. NO	1
		Date.	1.Sep.12

MODEL	MOTOR kW	FREQ. Hz	RATED SPEED rpm	POLES	TUBE	PRO. DIA. mm	NO. OF BLADES
KPL.1000.90.10.T.50.A	90	50	580	10	DN1000	700	4
KPL.1000.132.10.T.50.A	132						
KPL.1000.160.10.T.50.A	160						
KPL.1000.200.10.T.50.A	200						

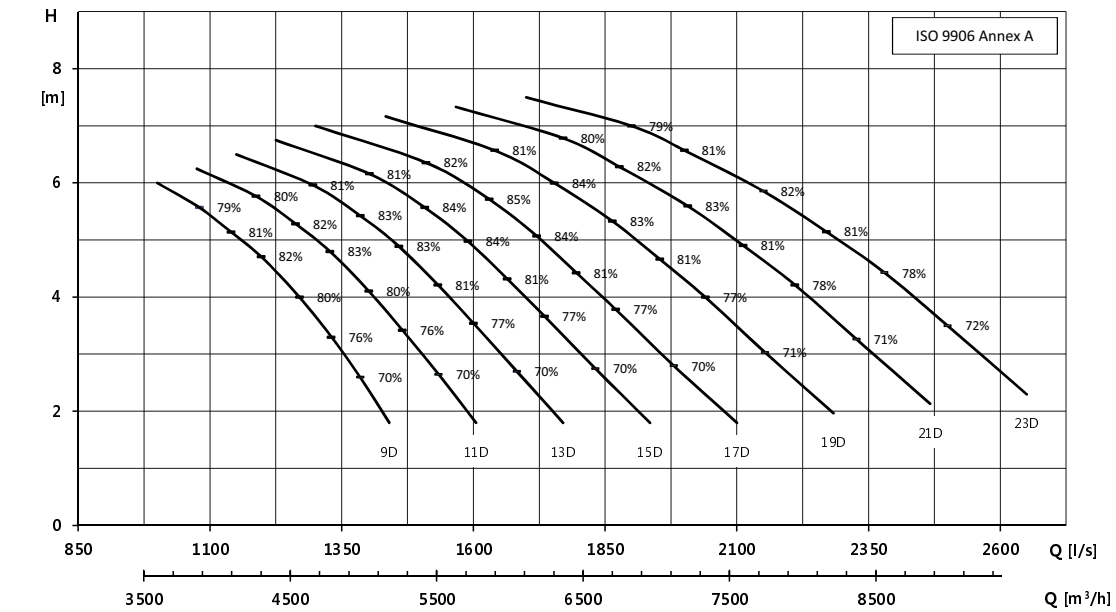

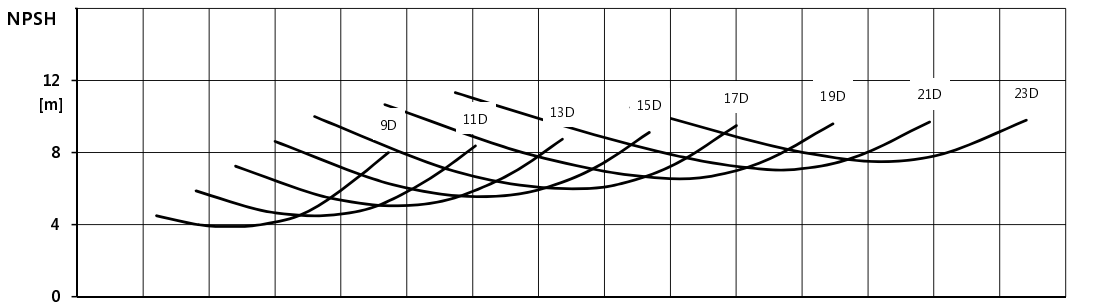

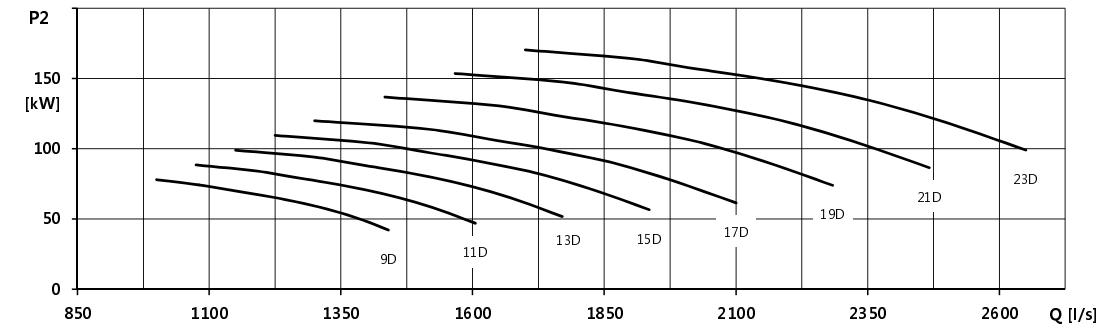

TM05 5416 3712

KPL.1200.---.10.T.50.A

GRUNDFOS	KPL.1200.---.10.T.50.A PERFORMANCE CURVE	Product	KPL
		Rev. NO	1
		Date.	1.Sep.12

MODEL	MOTOR kW	FREQ. Hz	RATED SPEED rpm	POLES	TUBE	PRO. DIA. mm	NO. OF BLADES
KPL.1200.220.10.T.50.A	220	50	580	10	DN1200	860	4
KPL.1200.250.10.T.50.A	250						
KPL.1200.300.10.T.50.A	300						
KPL.1200.350.10.T.50.A	350						
KPL.1200.400.10.T.50.A	400						

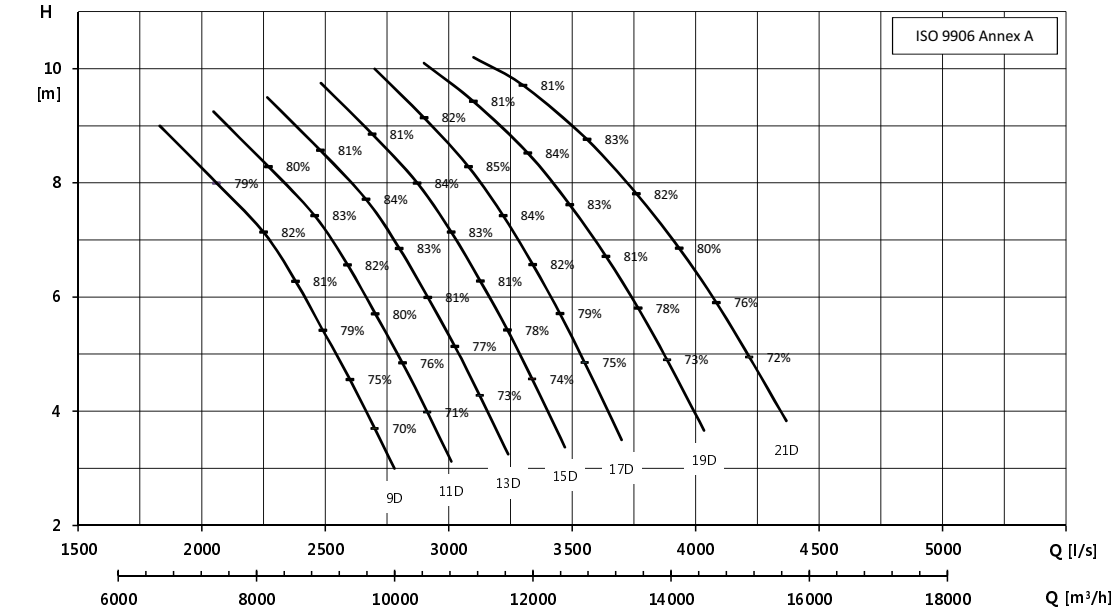

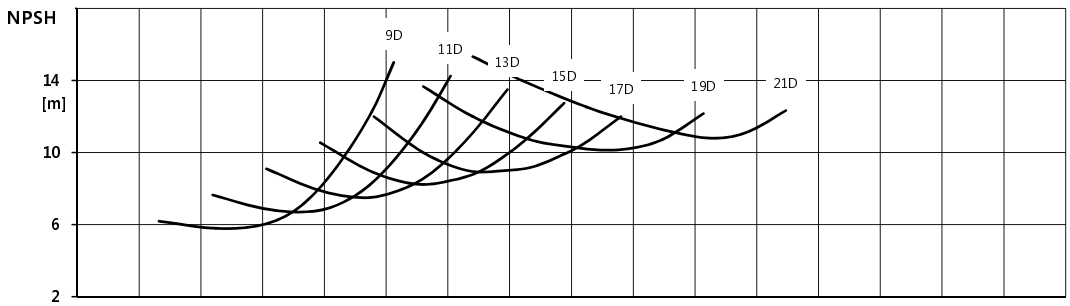

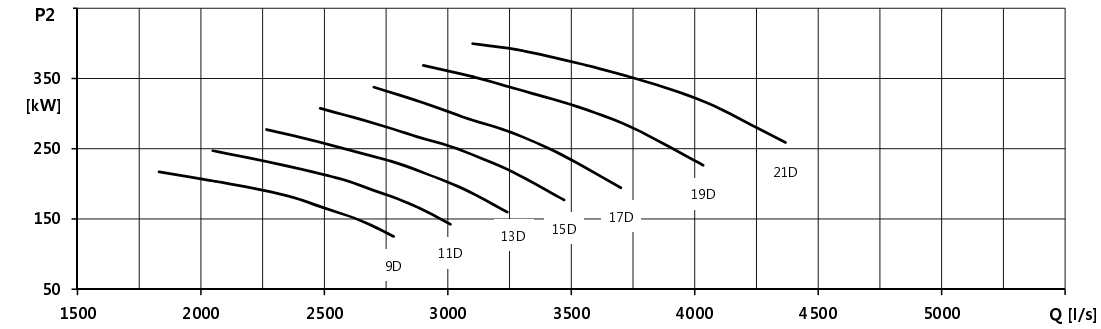

TM05 5417 4112

KPL.1200.---.12.T.50.A

GRUNDFOS	KPL.1200.---.12.T.50.A PERFORMANCE CURVE	Product	KPL
		Rev. NO	1
		Date.	1.Sep.12

MODEL	MOTOR kW	FREQ. Hz	RATED SPEED rpm	POLES	TUBE	PRO. DIA. mm	NO. OF BLADES
KPL.1200.160.12.T.50.A	160	50	485	12	DN1200	860	4
KPL.1200.200.12.T.50.A	200						
KPL.1200.250.12.T.50.A	250						
KPL.1200.300.12.T.50.A	300						

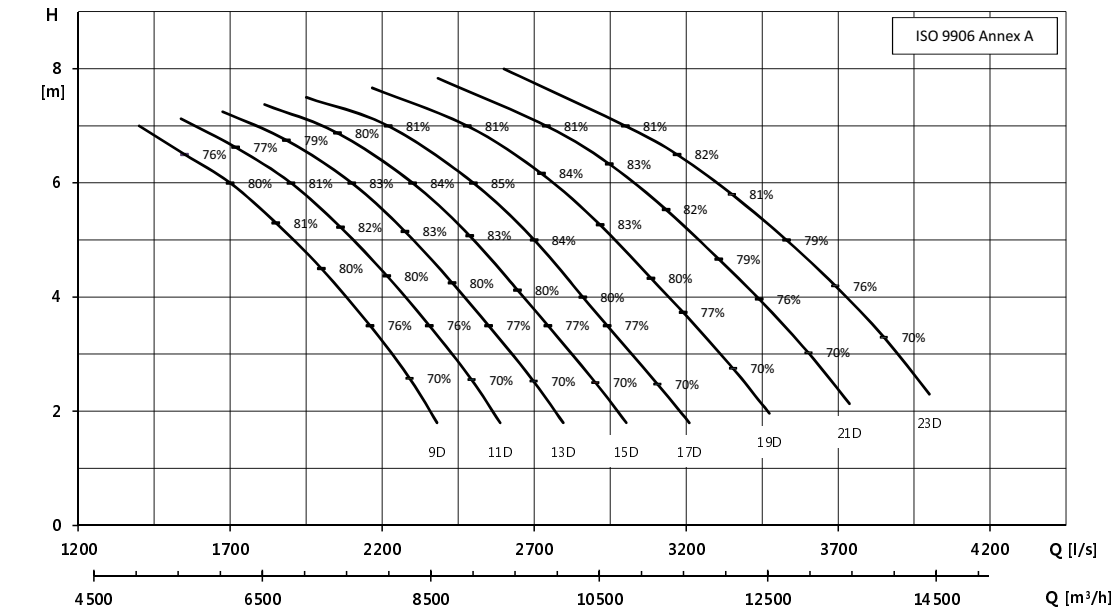

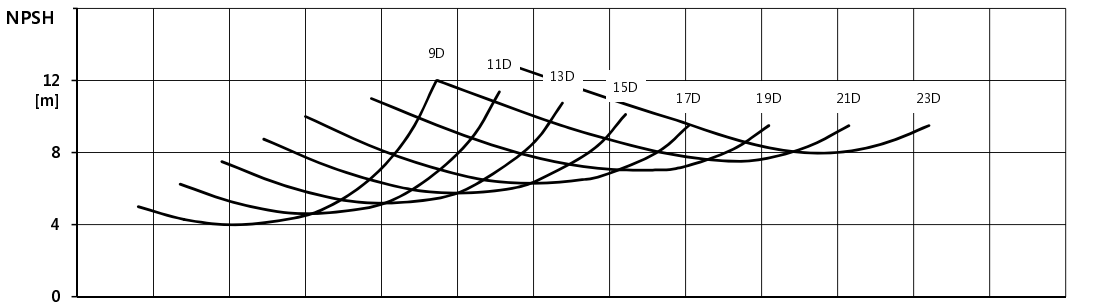

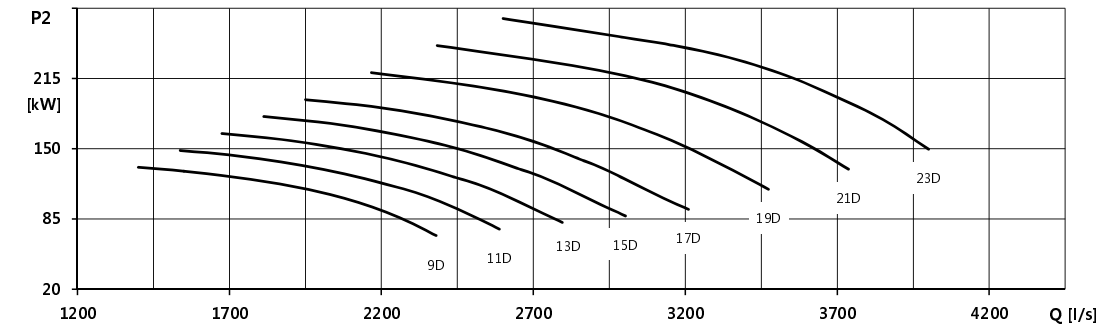

TM05 5418 3712

KPL.1400.---.12.T.50.A

GRUNDFOS	KPL.1400.---.12.T.50.A PERFORMANCE CURVE	Product	KPL
		Rev. NO	1
		Date.	1.Sep.12

MODEL	MOTOR kW	FREQ. Hz	RATED SPEED rpm	POLES	TUBE	PRO. DIA. mm	NO. OF BLADES
KPL.1400.220.12.T.50.A	220	50	485	12	DN1400	950	4
KPL.1400.250.12.T.50.A	250						
KPL.1400.300.12.T.50.A	300						
KPL.1400.350.12.T.50.A	350						
KPL.1400.400.12.T.50.A	400						

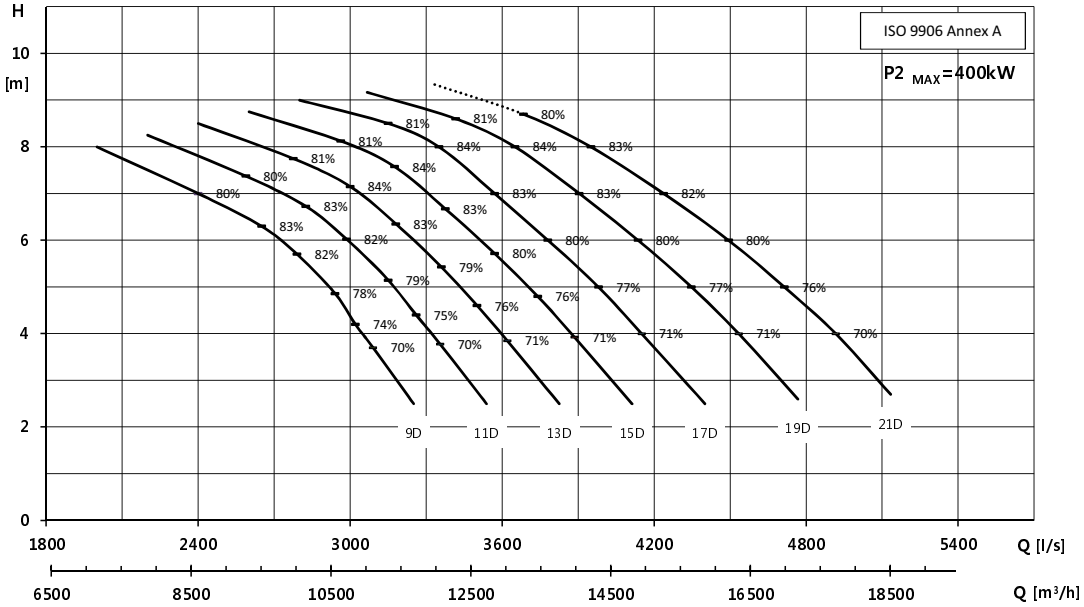

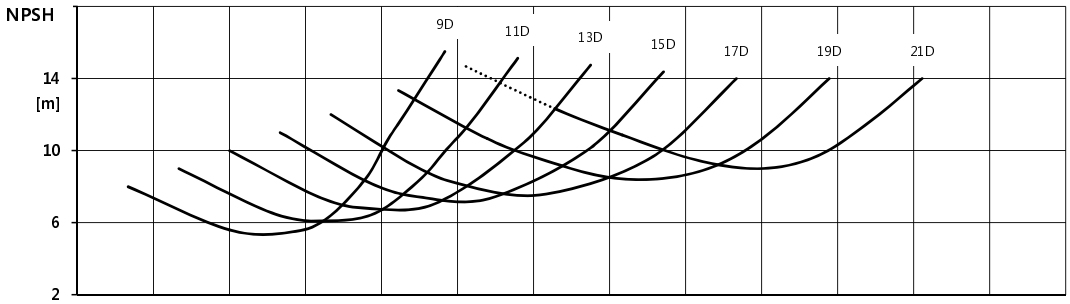

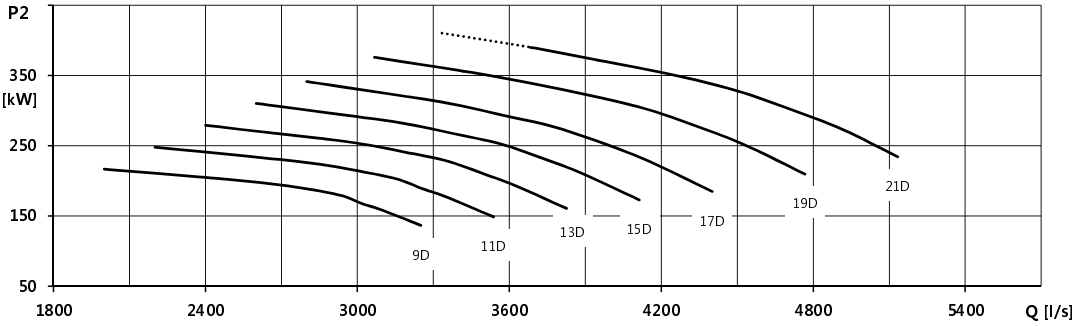

TM05 5419 4112

KPL.1400.---.14.T.50.A

GRUNDFOS	KPL.1400.---.14.T.50.A PERFORMANCE CURVE	Product	KPL
		Rev. NO	1
		Date.	1.Sep.12

MODEL	MOTOR kW	FREQ. Hz	RATED SPEED rpm	POLES	TUBE	PRO. DIA. mm	NO. OF BLADES
KPL.1400.160.14.T.50.A	160	50	410	14	DN1400	950	4
KPL.1400.200.14.T.50.A	200						
KPL.1400.250.14.T.50.A	250						
KPL.1400.300.14.T.50.A	300						

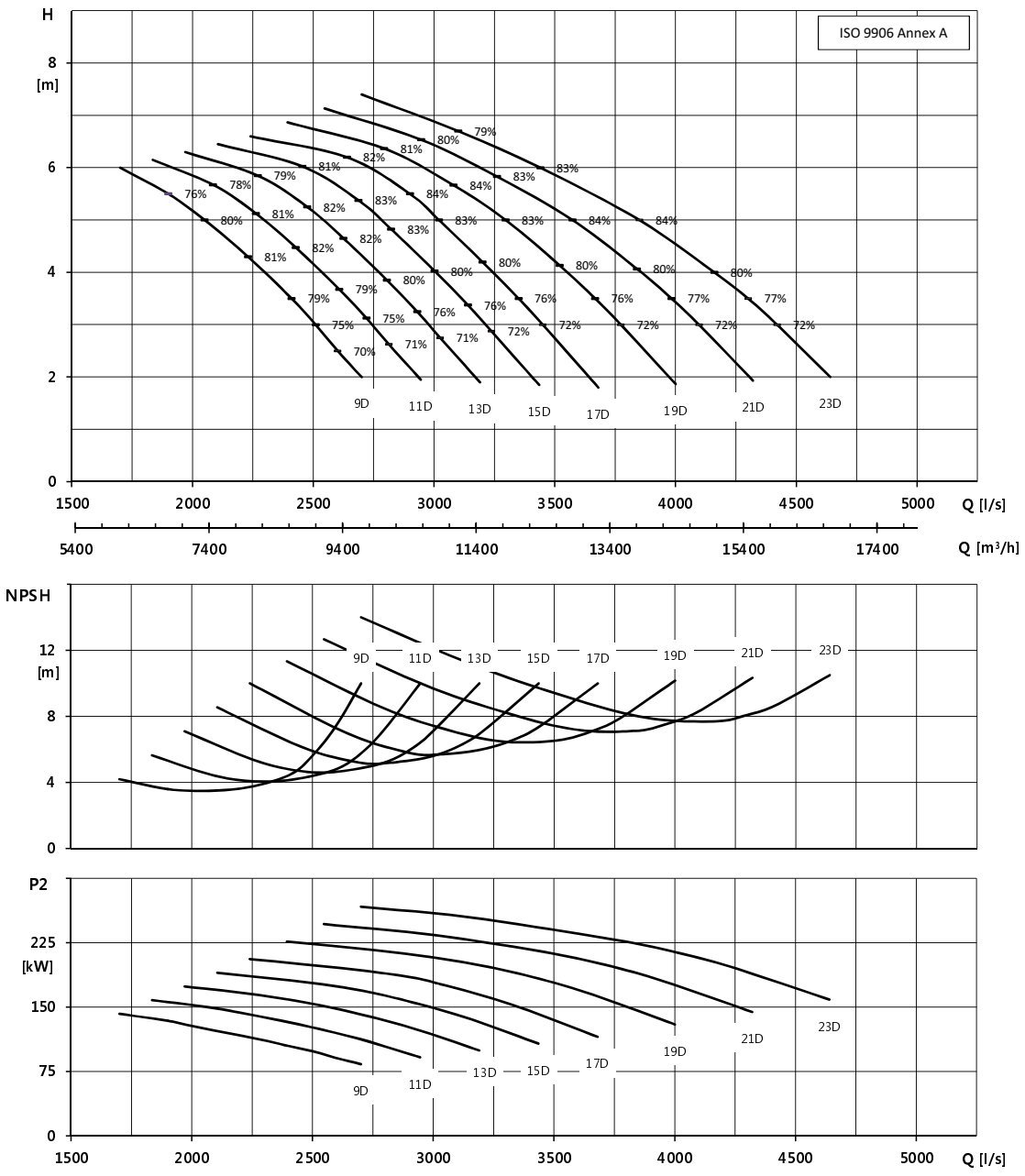

TM05 5420 3712

KPL.1500.---.12.T.50.A

GRUNDFOS	KPL.1500.---.12.T.50.A PERFORMANCE CURVE	Product	KPL
		Rev. NO	1
		Date.	1.Sep.12

MODEL	MOTOR kW	FREQ. Hz	RATED SPEED rpm	POLES	TUBE	PRO. DIA. mm	NO. OF BLADES
KPL.1500.350.12.T.50.A	350	50	485	12	DN1500	1060	4
KPL.1500.400.12.T.50.A	400						
KPL.1500.450.12.T.50.A	450						
KPL.1500.500.12.T.50.A	500						

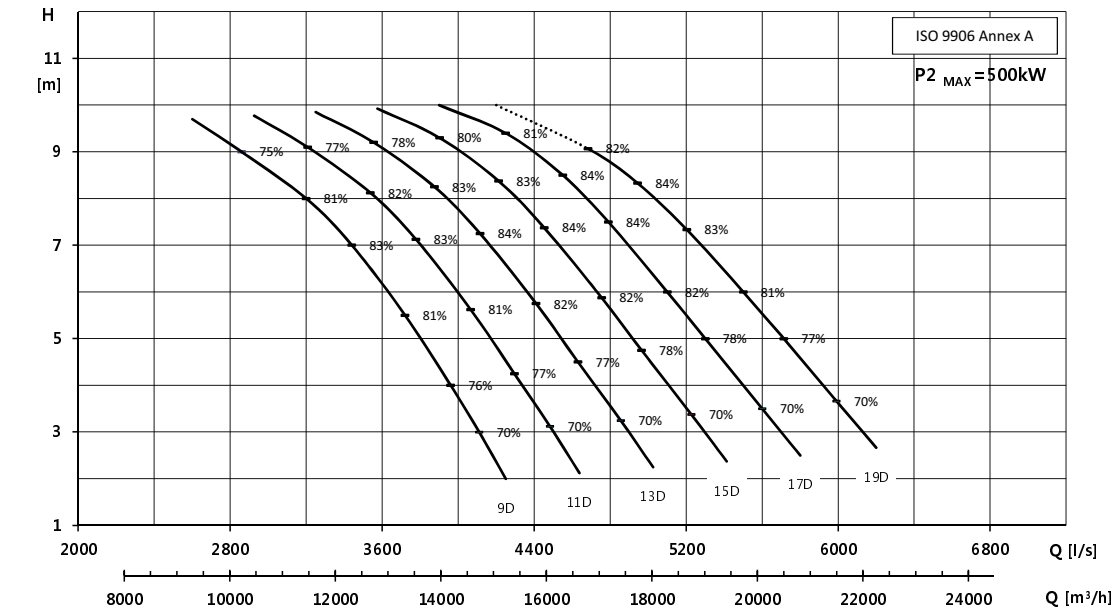

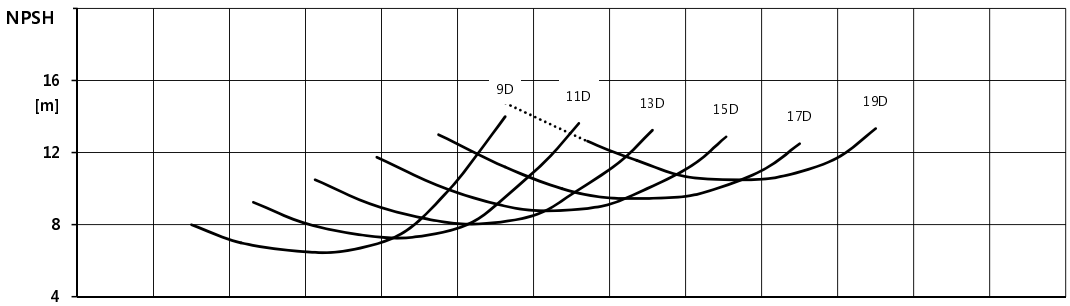

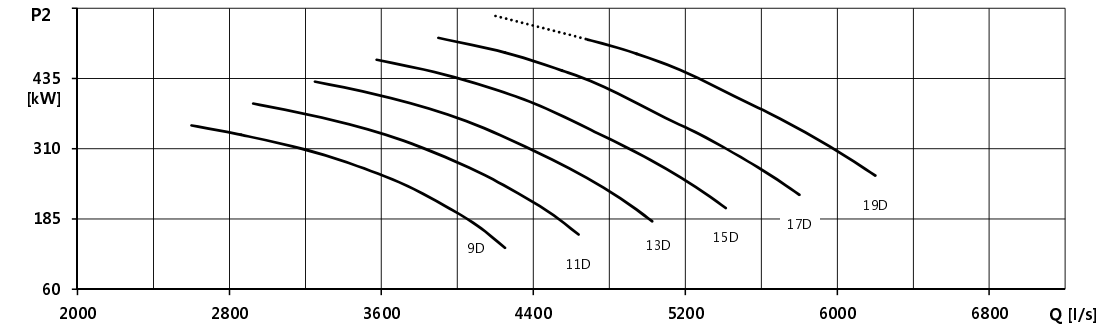

TM05 5421 4112

KPL.1500.---.14.T.50.A

GRUNDFOS	KPL.1500.---.14.T.50.A PERFORMANCE CURVE	Product	KPL
		Rev. NO	1
		Date.	1.Sep.12

MODEL	MOTOR kW	FREQ. Hz	RATED SPEED rpm	POLES	TUBE	PRO. DIA. mm	NO. OF BLADES
KPL.1500.220.14.T.50.A	220	50	410	14	DN1500	1060	4
KPL.1500.250.14.T.50.A	250						
KPL.1500.300.14.T.50.A	300						
KPL.1500.375.14.T.50.A	375						
KPL.1500.450.14.T.50.A	450						

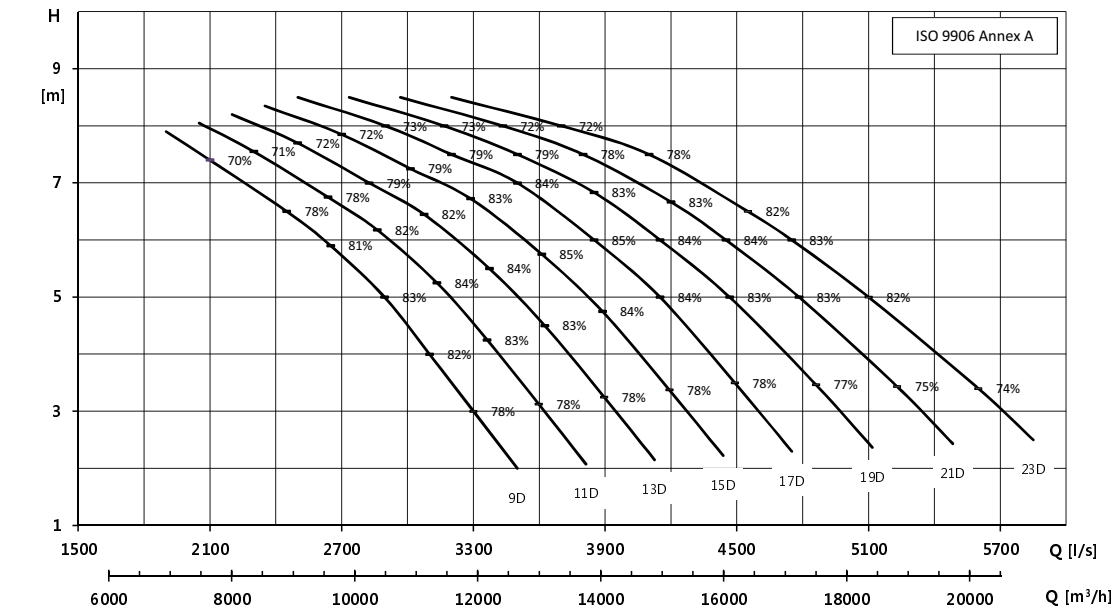

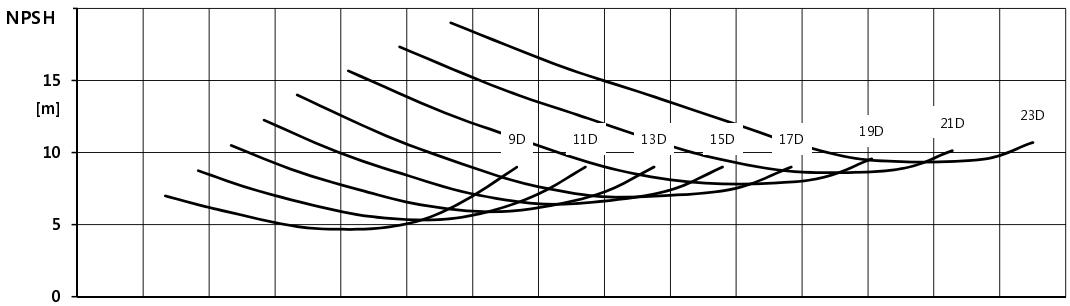

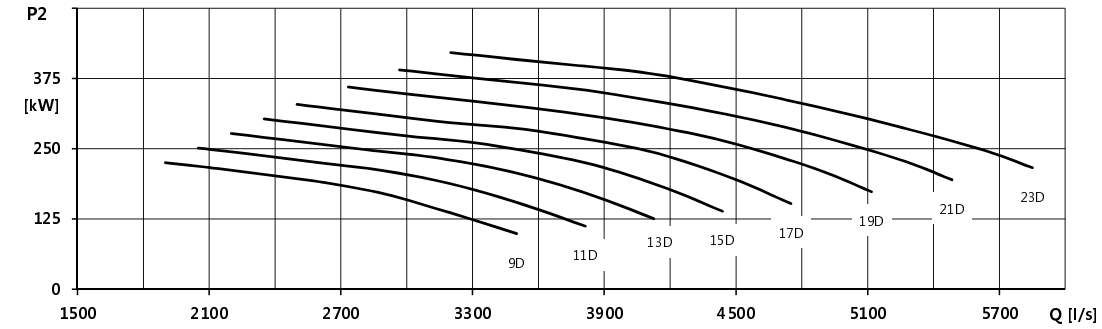

TM05 5422 3712

KPL.1600.---.14.T.50.A

GRUNDFOS	KPL.1600.---.14.T.50.A PERFORMANCE CURVE	Product	KPL
		Rev. NO	1
		Date.	1.Sep.12

MODEL	MOTOR kW	FREQ. Hz	RATED SPEED rpm	POLES	TUBE	PRO. DIA. mm	NO. OF BLADES
KPL.1600.350.14.T.50.A	350	50	410	14	DN1600	1150	4
KPL.1600.400.14.T.50.A	400						
KPL.1600.500.14.T.50.A	500						
KPL.1600.550.14.T.50.A	550						

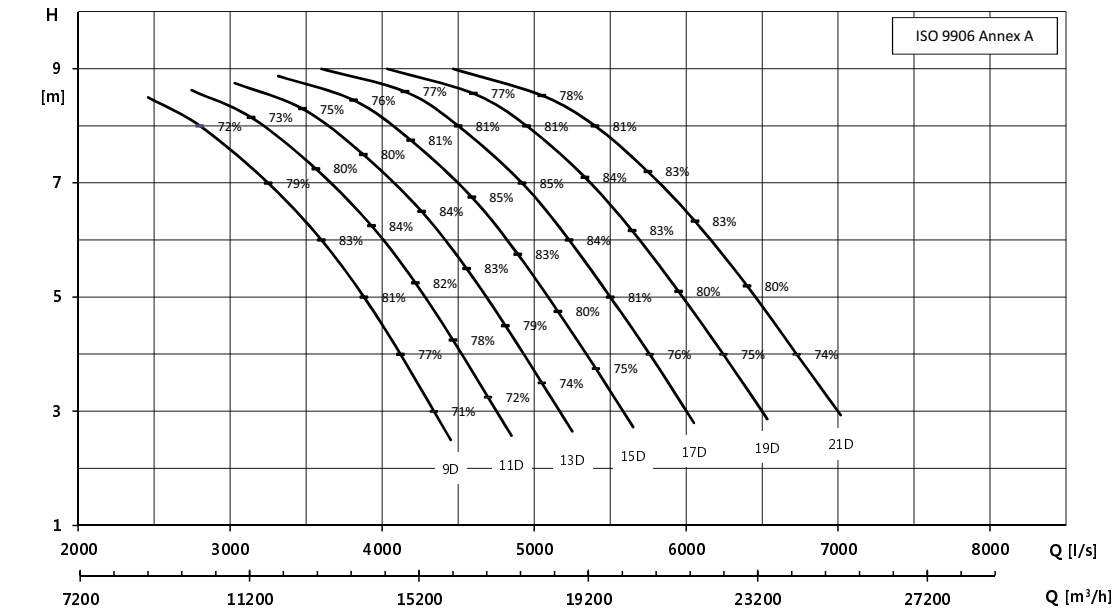

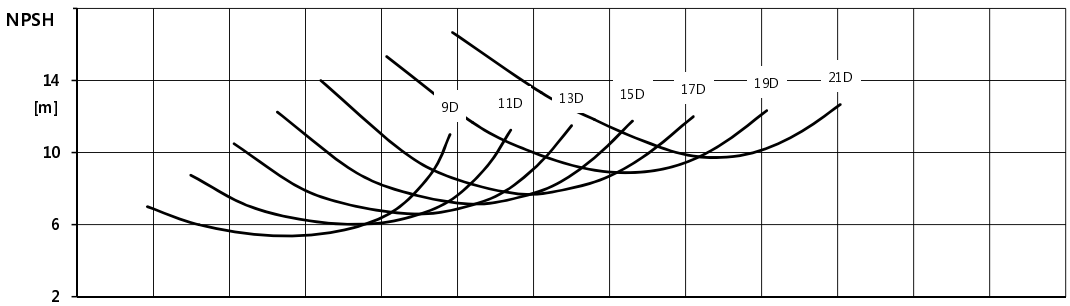

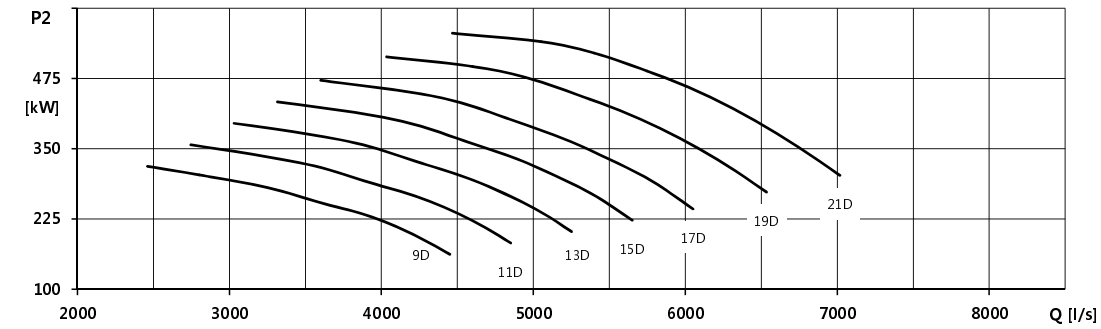

TM05 5423 4112

KPL.1600.---.16.T.50.A

GRUNDFOS	KPL.1600.---.16.T.50.A PERFORMANCE CURVE	Product	KPL
		Rev. NO	1
		Date.	1.Sep.12

MODEL	MOTOR kW	FREQ. Hz	RATED SPEED rpm	POLES	TUBE	PRO. DIA. mm	NO. OF BLADES
KPL.1600.250.16.T.50.A	250	50	365	16	DN1600	1150	4
KPL.1600.300.16.T.50.A	300						
KPL.1600.350.16.T.50.A	350						
KPL.1600.400.16.T.50.A	400						
KPL.1600.450.16.T.50.A	450						

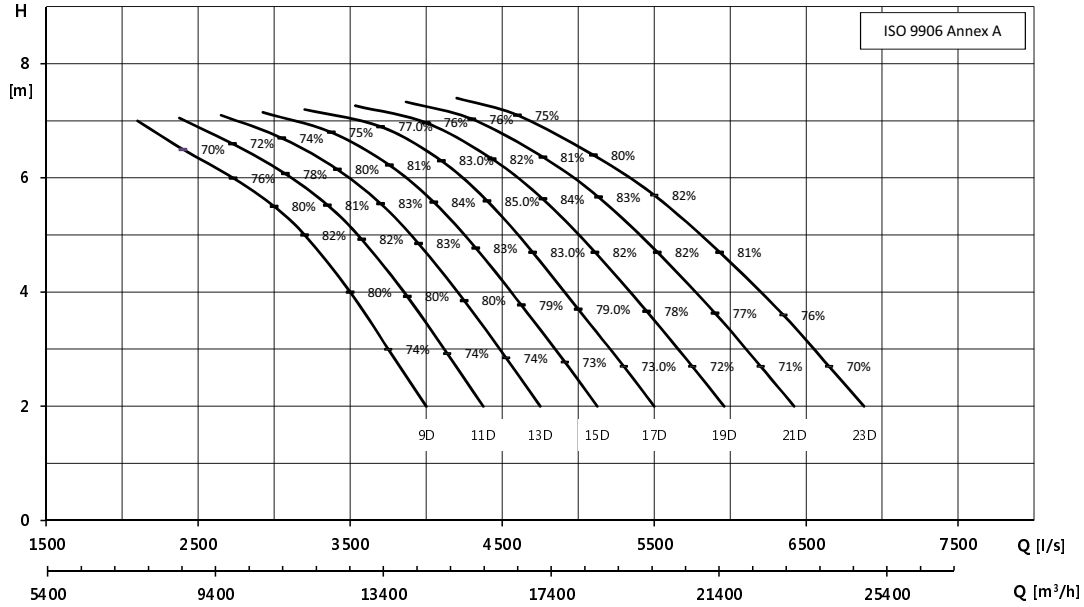

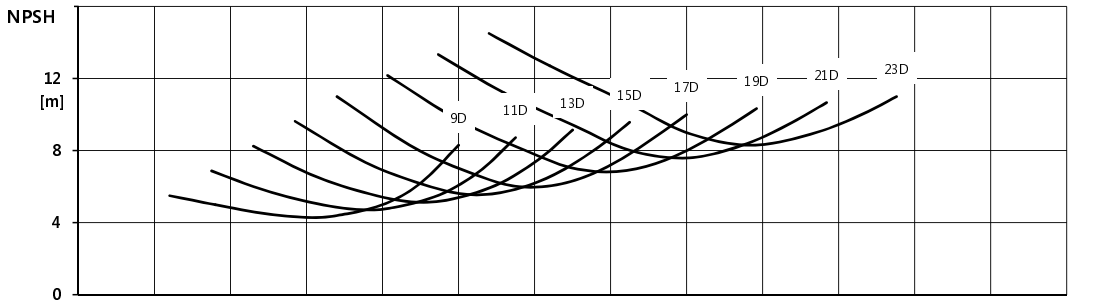

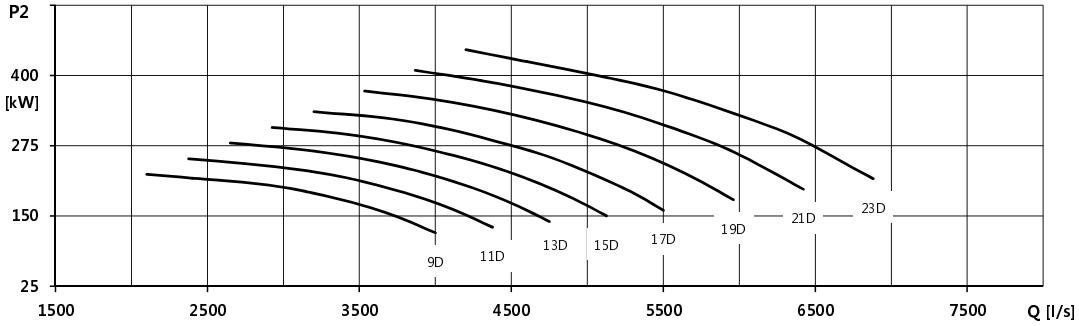

TM05 5424 4112

KPL.1800.---.16.T.50.A

GRUNDFOS	KPL.1800.---.16.T.50.A PERFORMANCE CURVE	Product	KPL
		Rev. NO	1
		Date.	1.Sep.12

MODEL	MOTOR kW	FREQ. Hz	RATED SPEED rpm	POLES	TUBE	PRO. DIA. mm	NO. OF BLADES
KPL.1800.450.16.T.50.A	450	50	365	16	DN1800	1300	4
KPL.1800.500.16.T.50.A	500						
KPL.1800.600.16.T.50.A	600						
KPL.1800.700.16.T.50.A	700						

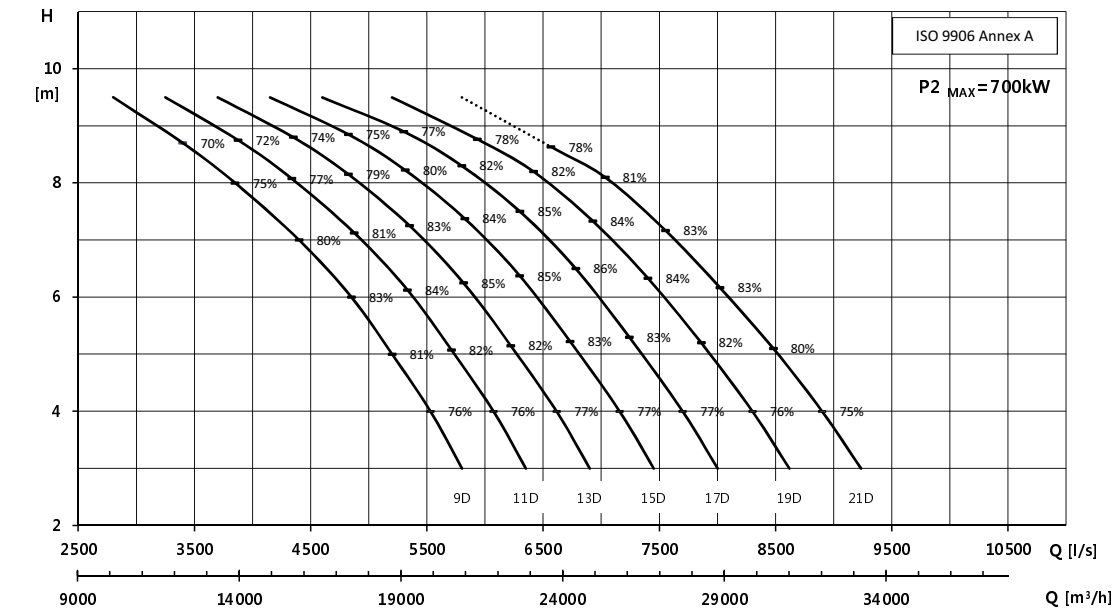

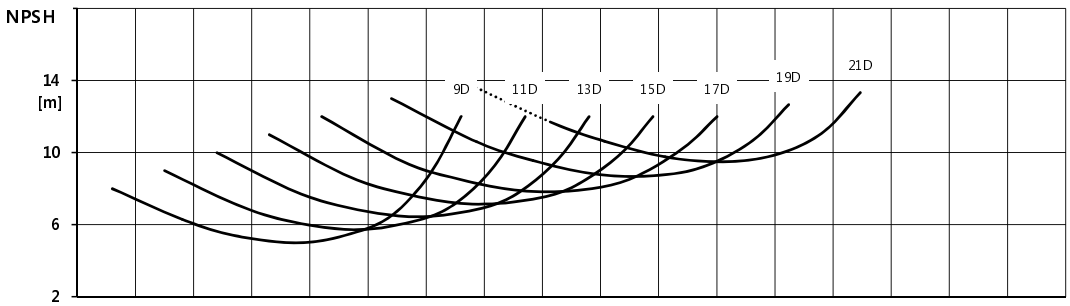

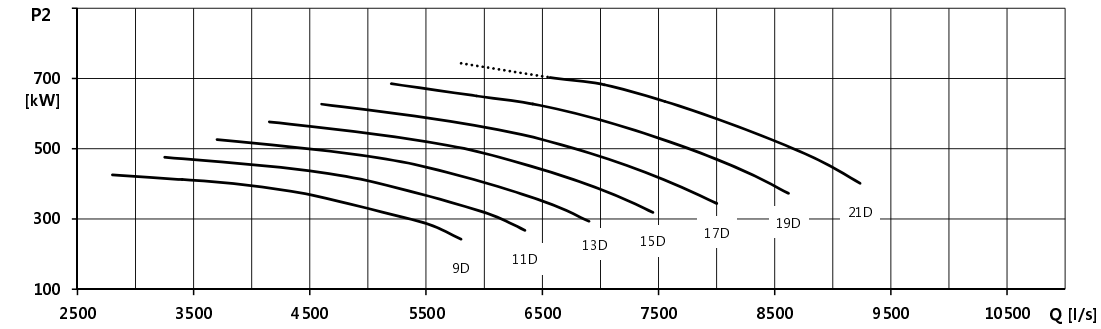

TM05 5425 4112

9. Accessories

Accessories for KPL and KWM must be ordered separately, please contact Grundfos.

Anti cavitation cone

The anti cavitation cone (ACC) ensures a better suction flow.

The ACC is designed and patented by Grundfos.

ACC	A	B	C	D	Foundation bolt	Pipe diameter DN
60 ACC	520	20	210	600	M16x250L-8ea	500~800
100 ACC	870	36	350	1000	M30x400L-8ea	900~1100
120 ACC	1040	42	420	1200	M36x500L-8ea	1200~1300
150 ACC	1300	48	525	1500	M42x630L-8ea	1400~1800

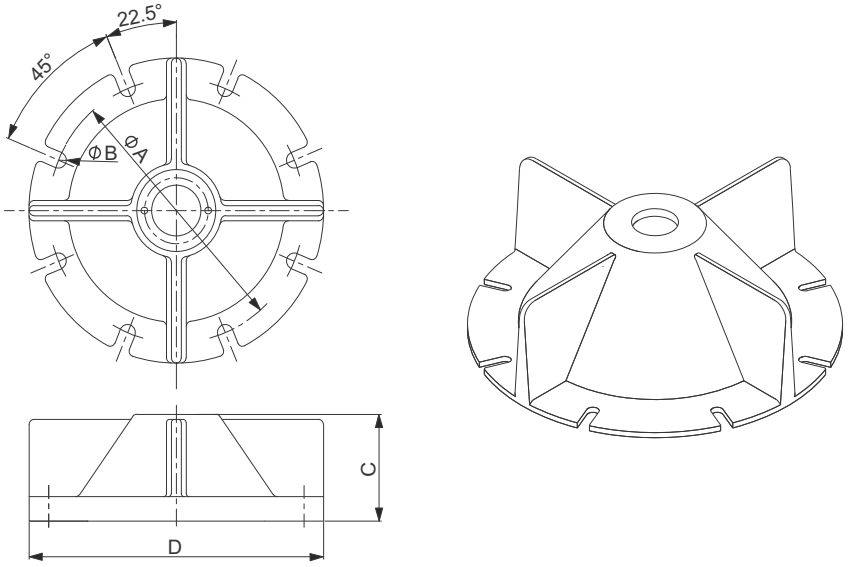

TM05 5617 3912 - TM05 5616 3912

Fig. 9 Anti cavitation cone

Seat ring

Pipe DN	ØDb [mm]	ØDs1 [mm]	ØDs2 [mm]
500	508	325	400
600	609.6	450	530
700	711.2	550	630
800	812.8	650	730
900	914.4	650	730
1000	1016	830	930
1200	1219.2	1000	1120
1400	1422.4	1200	1310
1500	1524	1280	1420
1600	1625	1400	1520
1800	1828.8	1600	1720

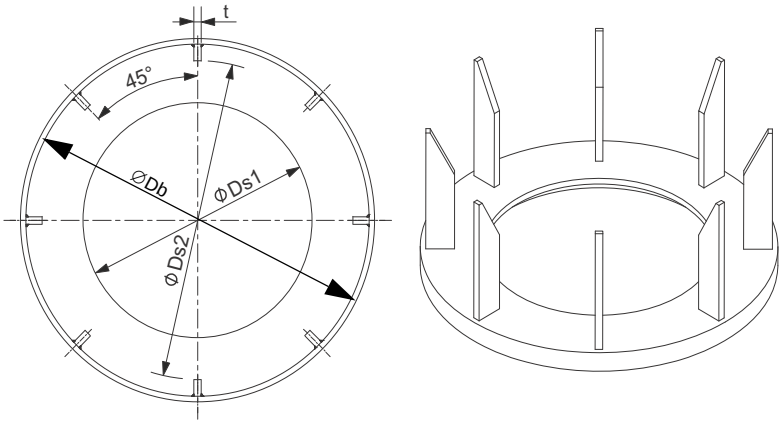

TM05 5618 4212

Fig. 10 Seat ring

Cable suspension system

The cable suspension system is illustrated in fig. 11.

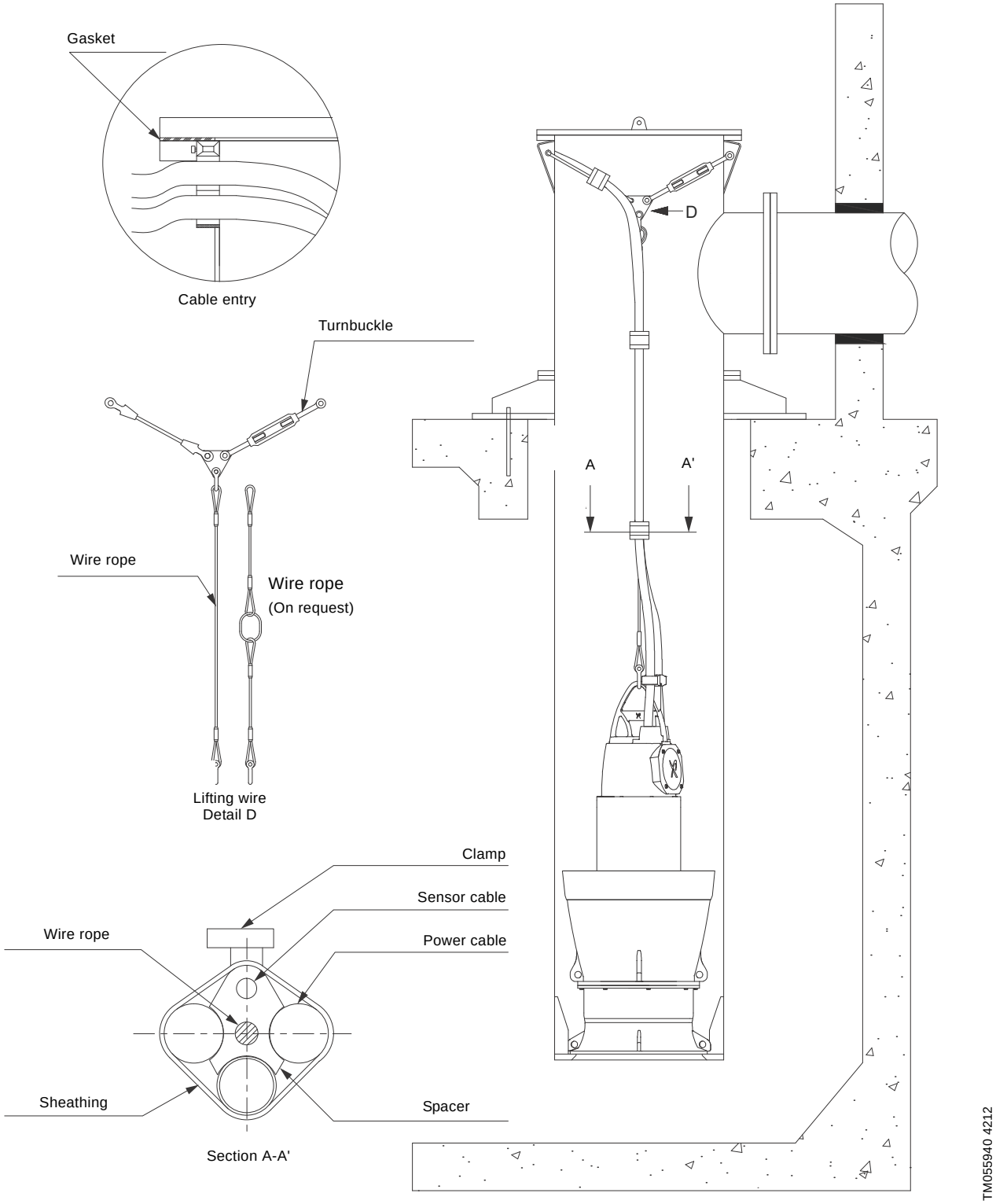

Fig. 11 Securing the cable to the lifting chain

10. Dimensions

Pump dimensions

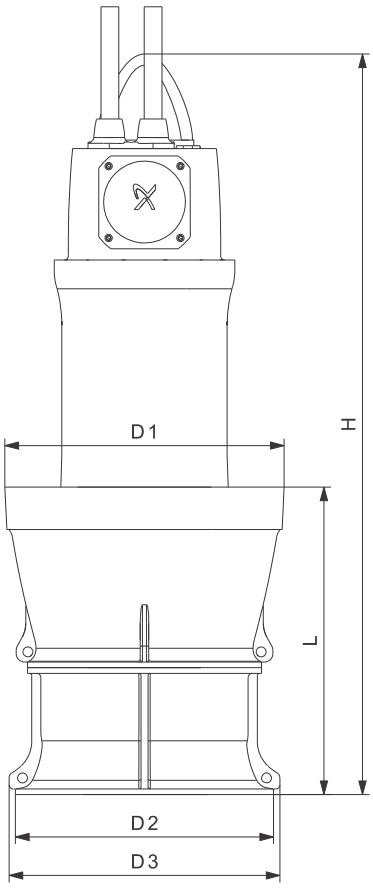

TM0559414212

Fig. 12 Dimensional sketch, KPL

Pump type	Weight [kg]	H [mm]	L [mm]	D1 [mm]	D2 [mm]	D3 [mm]
KPL.500.11.4.T.50.A	340	990	530	490	390	430
KPL.500.15.4.T.50.A	360	990				
KPL.500.19.4.T.50.A	470	1265				
KPL.500.22.4.T.50.A	480	1265				
KPL.600.11.6.T.50.A	470	1200	600	590	520	430
KPL.600.15.6.T.50.A	480	1200				
KPL.600.19.6.T.50.A	560	1425				
KPL.600.22.6.T.50.A	580	1425				
KPL.700.55.6.T.50.A	1020	1890	740	690	620	660
KPL.700.75.6.T.50.A	1070	1890				
KPL.700.90.6.T.50.A	1120	1890				
KPL.700.110.6.T.50.A	1230	2170				
KPL.700.30.8.T.50.A	870	1790				
KPL.700.37.8.T.50.A	920	1790				
KPL.700.45.8.T.50.A	960	1855				
KPL.800.110.6.T.50.A	1310	2230	950	790	720	760
KPL.800.45.8.T.50.A	1040	1915				
KPL.800.55.8.T.50.A	1110	1950				
KPL.800.75.8.T.50.A	1160	1950				
KPL.800.90.8.T.50.A	1310	2230				
KPL.900.132.6.T.50.A	2210	2450	950	890	720	760
KPL.900.160.6.T.50.A	2260	2450				
KPL.900.200.6.T.50.A	2460	2470				

Pump type	Weight [kg]	H [mm]	L [mm]	D1 [mm]	D2 [mm]	D3 [mm]
KPL.1000.132.8.T.50.A	2810	2590	1090	990	910	960
KPL.1000.160.8.T.50.A	2890	2740				
KPL.1000.200.8.T.50.A	2990	2740				
KPL.1000.250.8.T.50.A	3320	2870				
KPL.1000.300.8.T.50.A	3620	2870				
KPL.1000.90.10.T.50.A	2930	2740				
KPL.1000.132.10.T.50.A	2990	2740				
KPL.1000.160.10.T.50.A	3320	2870				
KPL.1000.200.10.T.50.A	3570	2870				
KPL.1200.220.10.T.50.A	4110	3010	1300	1190	1100	1160
KPL.1200.250.10.T.50.A	4260	3010				
KPL.1200.300.10.T.50.A	4690	3110				
KPL.1200.335.10.T.50.A	4790	3110				
KPL.1200.350.10.T.50.A	4890	3110				
KPL.1200.400.10.T.50.A	5090	3110				
KPL.1200.160.12.T.50.A	4110	3010				
KPL.1200.200.12.T.50.A	4590	3110				
KPL.1200.250.12.T.50.A	4890	3110				
KPL.1200.300.12.T.50.A	5090	3110				
KPL.1400.220.12.T.50.A	5310	3180	1480	1390	1290	1360
KPL.1400.250.12.T.50.A	5510	3180				
KPL.1400.300.12.T.50.A	5770	3330				
KPL.1400.350.12.T.50.A	6200	3330				
KPL.1400.400.12.T.50.A	6300	3330				
KPL.1400.160.14.T.50.A	5210	3180				
KPL.1400.200.14.T.50.A	5310	3180				
KPL.1400.250.14.T.50.A	6170	3330				
KPL.1400.300.14.T.50.A	6300	3330				
KPL.1500.350.12.T.50.A	6780	3550	1680	1490	1400	1460
KPL.1500.400.12.T.50.A	6880	3550				
KPL.1500.450.12.T.50.A	7080	3550				
KPL.1500.500.12.T.50.A	7530	3750				
KPL.1500.220.14.T.50.A	6120	3500				
KPL.1500.250.14.T.50.A	6720	3500				
KPL.1500.300.14.T.50.A	6880	3550				
KPL.1500.375.14.T.50.A	7530	3750				
KPL.1500.450.14.T.50.A	6950	3750				
KPL.1600.350.14.T.50.A	7380	3590	1770	1580	1500	1560
KPL.1600.400.14.T.50.A	7930	3790				
KPL.1600.500.14.T.50.A	9200	3890				
KPL.1600.550.14.T.50.A	9400	3890				
KPL.1600.250.16.T.50.A	7380	3590				
KPL.1600.300.16.T.50.A	8030	3790				
KPL.1600.350.16.T.50.A	9100	3890				
KPL.1600.400.16.T.50.A	9400	3890				
KPL.1600.450.16.T.50.A	9600	3890				
KPL.1800.450.16.T.50.A	10380	4180	1930	1780	1700	1760
KPL.1800.500.16.T.50.A	10980	4180				
KPL.1800.600.16.T.50.A	11860	4130				
KPL.1800.700.16.T.50.A	12360	4130				

Installation dimensions

The requirements for installation are shown in the table below. Figures 14 to 19 show installation examples.

ØD [mm]	L[1] [mm]	L1 [mm]	L2[1] [mm]	S1 [mm]	L.W.L[2] [mm]
500		250		750-1200	1000-1450
600		300		1100-1400	1400-1700
700		350		1300-1750	1650-2100
800		400		1400-2100	1800-2500
900		450		1500-2550	1950-3000
1000		500		1650-2800	2150-3300
1200		600		2000-3400	2600-4000
1400		700		2300-3800	3000-4500
1500		750		2450-4050	3200-4800
1600		800		3000-4200	3800-5000
1800		900		4000-4600	4900-5500

1 Site specific
2 Low water level

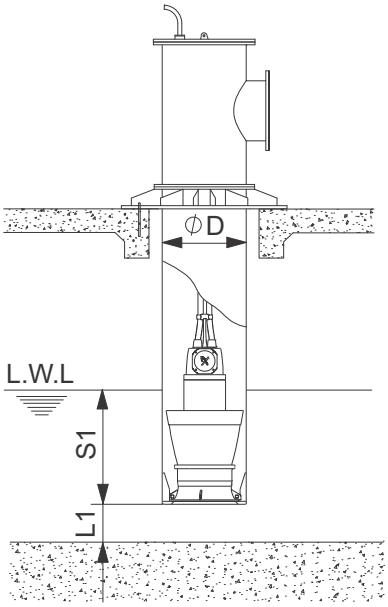

TM05 5922 4212

Fig. 13 Low water level, KPL pump

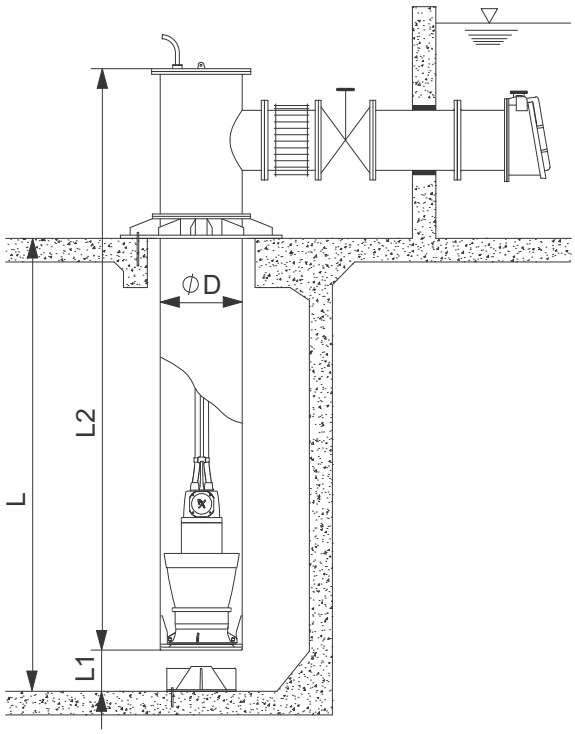

TM05 5301 3612

Fig. 14 Installation dimensions, KPL pump, ACC installed

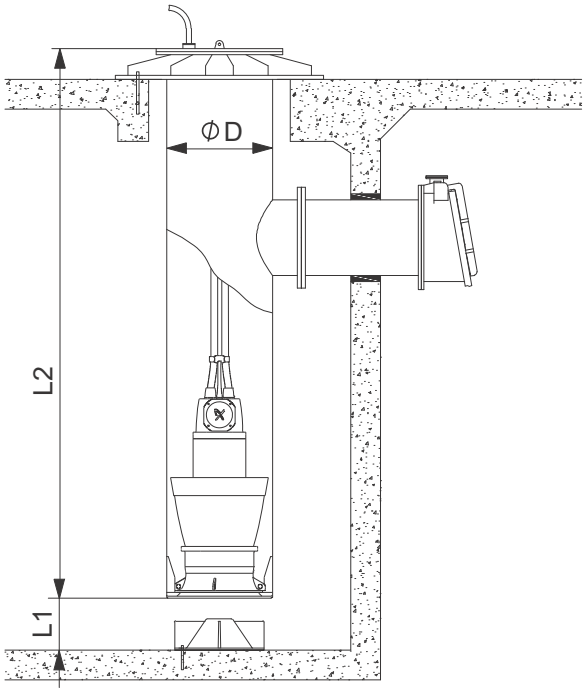

TM05 5302 3612

Fig. 15 Installation dimensions, KPL pump, ACC installed

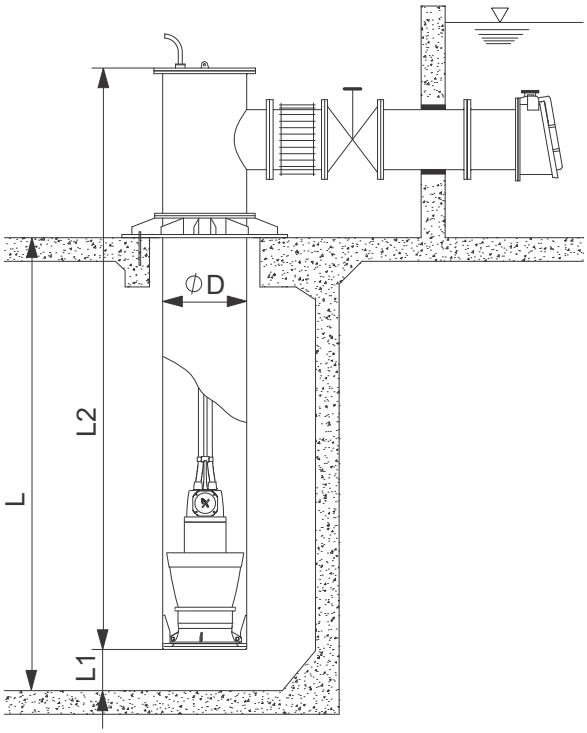

Fig. 16 Installation dimensions, KPL pump

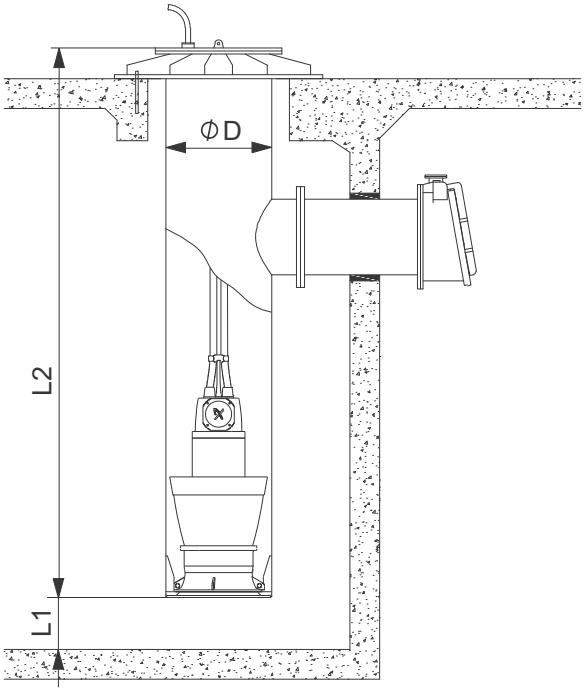

Fig. 17 Installation dimensions, KPL pump

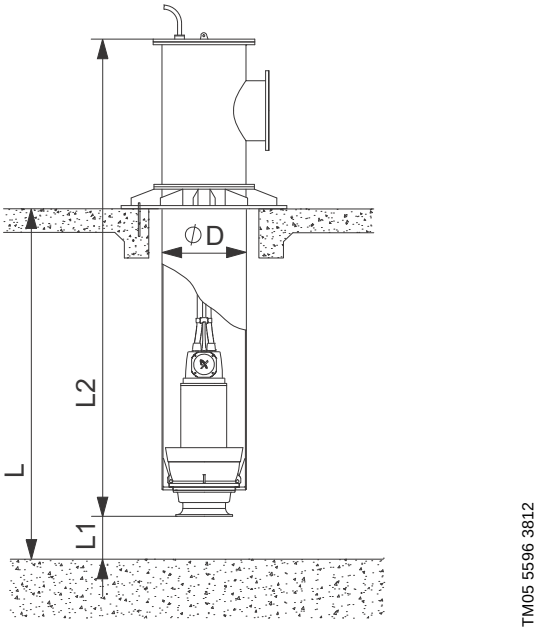

Fig. 18 Installation dimensions, KWM pump

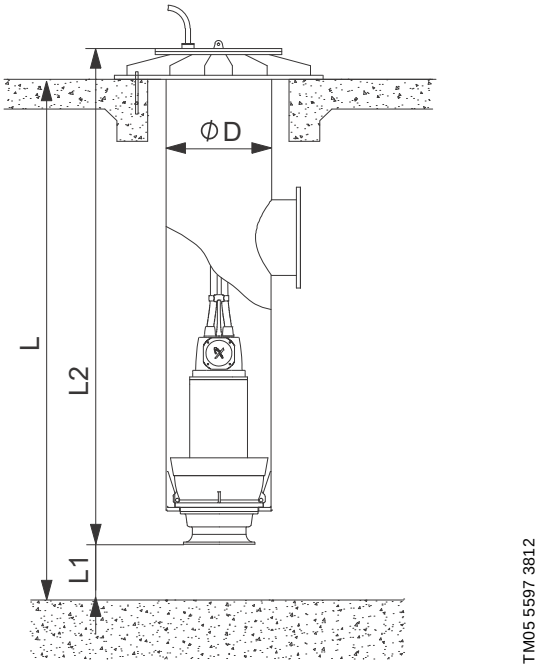

Fig. 19 Installation dimensions, KWM pump

Pit construction

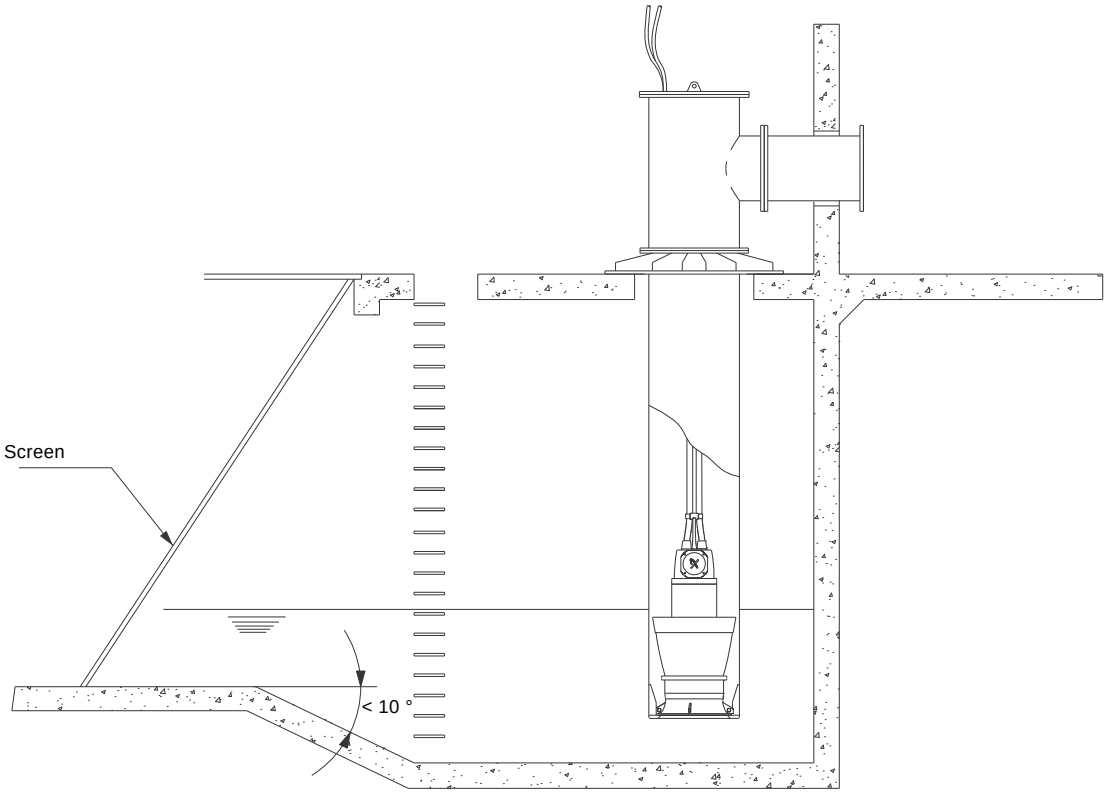

TM03 9470 4007

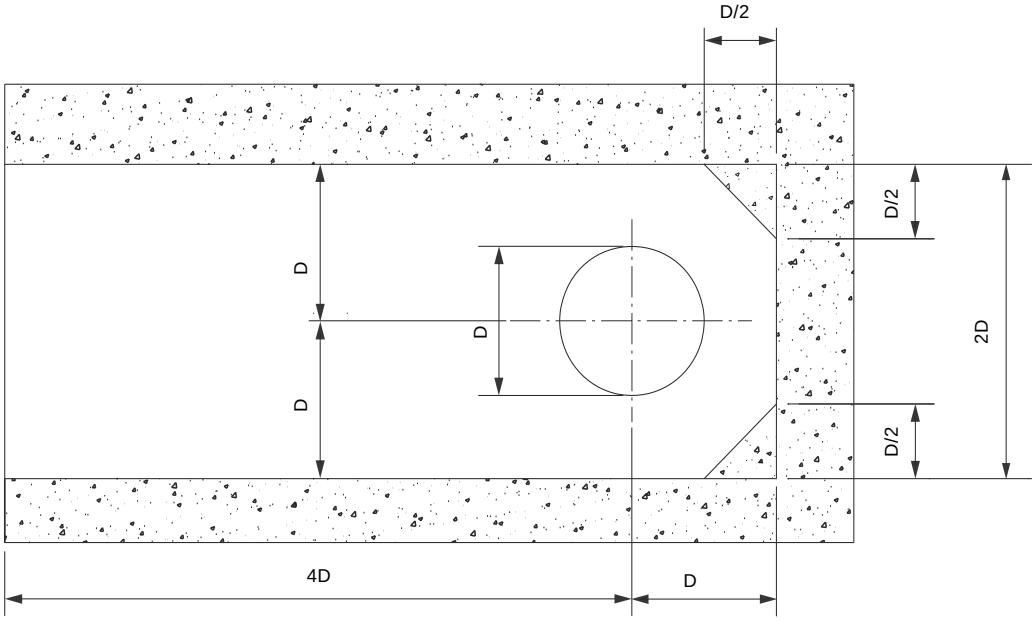

TM03 9471 4212

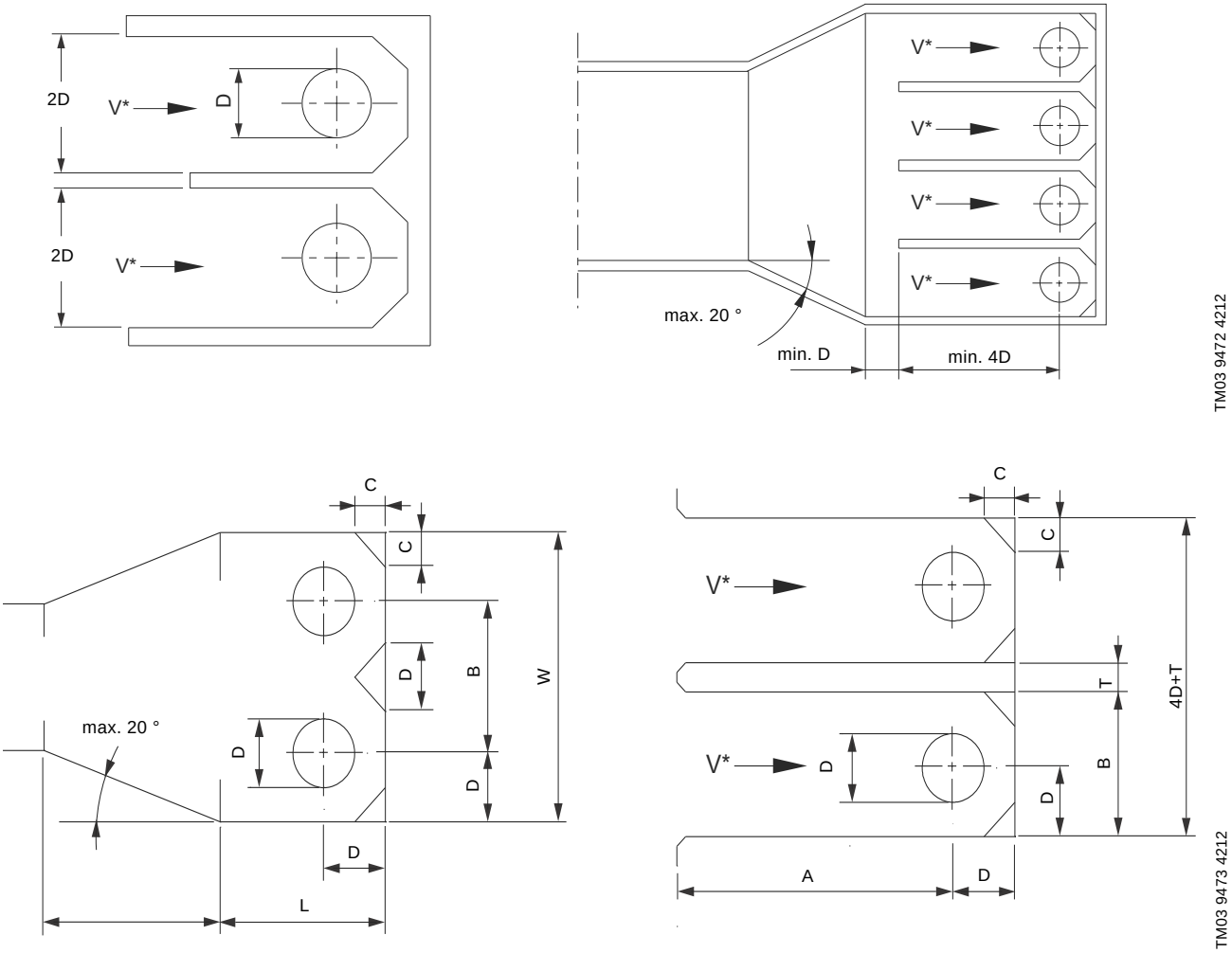

V*: 0.7 m/sec for stormwater and sewage containing particles.
0.3 m/sec for screened stormwater and sewage without particles.

Dimensions

D (pipe diameter DN) [mm]	A [mm]	B [mm]	C [mm]	W [mm]	T	L [mm]
500	2000	1000	250	2000	Depending on construction	2000
600	2400	1200	300	2400		2400
700	2800	1400	350	2800		2800
800	3200	1600	400	3200		3200
900	3600	1800	450	3600		3600
1000	4000	2000	500	4000		4000
1100	4400	2200	550	4400		4400
1200	4800	2400	600	4800		4800
1400	5600	2800	700	5600		5600
1500	6000	3000	750	6000		6000
1600	6400	3200	800	6400		6400
1800	7200	3600	900	7200		7200

11. Installation type

This section gives an overview of installation types.

The installation types shown in this section are only examples. For more information on suitable installation types, contact Grundfos.

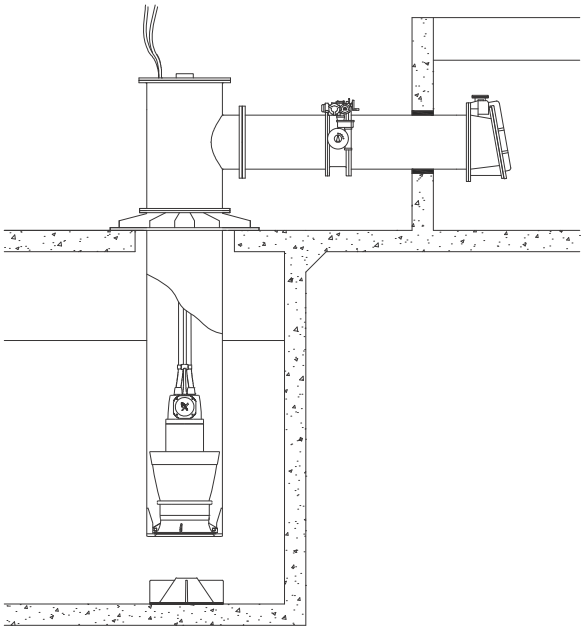

Fig. 20 Discharge above floor and with discharge pipe valve, non-return valve and ACC

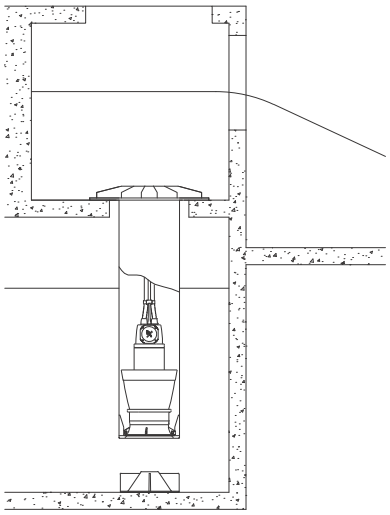

Fig. 21 Discharge above floor and with discharge pipe and ACC

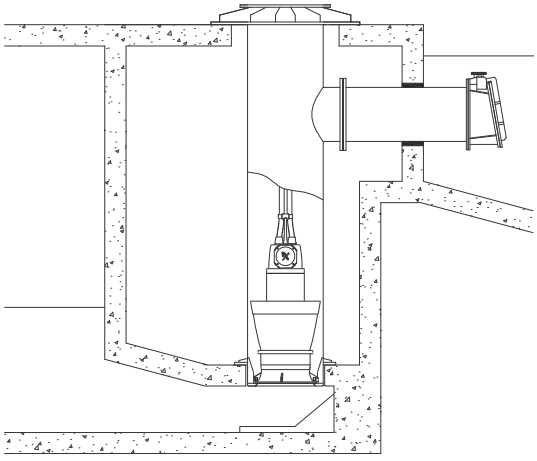

Fig. 22 Discharge above floor for low suction water levels and formed suction intake (FSI)

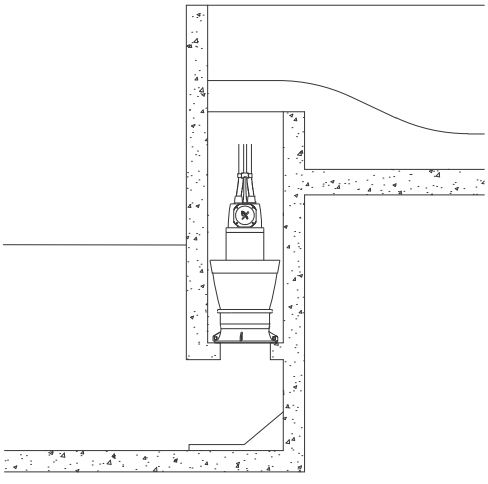

Fig. 23 Discharge above floor and with discharge column (reinforced concrete) and channel

BE > THINK > INNOVATE >

Being responsible is our foundation
Thinking ahead makes it possible
Innovation is the essence

98344190 1112
ECM: 1098714

The name Grundfos, the Grundfos logo, and the payoff **be think innovate** are registered trademarks owned by Grundfos Holding A/S or Grundfos A/S, Denmark. All rights reserved worldwide.

GRUNDFOS A/S . DK-8850 Bjerringbro . Denmark
Telephone: +45 87 50 14 00
www.grundfos.com

GRUNDFOS®